Serial Number: 7341
DM45/HP1050/CUMMINS QSK

PARTS LIST

MODEL: DM45

Read the instruction manual before operating this equipment.

WARNING: This manual contains data SPECIFIC to the drilling rig with serial number: 7341.

The Distributer/Dealer serving the area in which your equipment is working will be able to give you the BEST and FASTEST SERVICE of Genuine Replacement Parts.

IMPORTANT:

Be sure the parts book which you are ordering parts from is the parts book for the Drill needing the replacement parts!
Each parts book is CUSTOM MADE to a specific Drill.
All parts books have a Drill SERIAL NUMBER and MODEL DESCRIPTION on the header of each parts page. All Drills have a SERIAL NUMBER welded on the frame at the drilling end of the MAIN FRAME or CHASSIS.

YOU MUST USE THE CORRECT PARTS BOOK TO INSURE CORRECT PARTS IDENTIFICATION.

Continuing Product Improvement and advancement of product design may cause changes to your Drill which may not be reflected in this Parts/Service Manual. Production models may vary in some detail. Drilling Solutions reserves the right to modify or make changes without notice or obligation.

Parts Ordering Instructions

By giving complete information, you will enable us to fill your order correctly and avoid unnecessary delays!

When ordering Replacement Parts, specify:

1. Unit **Serial Number**
2. The **Name** of each part as listed
3. The **Part Number** as listed in your Partsbook.
4. **Quantity** of parts desired.

Refer all communications concerning this unit to our nearest Branch Office, Distributor, Dealer or Agent

WARNING IN THE MANUAL

CALIFORNIA PROPOSITION 65 INFORMATION

TO CALIFORNIA CUSTOMERS AND
TO CUSTOMERS SELLING DIESEL ENGINE EQUIPMENT
INTO OR FOR USE IN CALIFORNIA

CALIFORNIA
Proposition 65 Warning

Diesel engine exhaust and some of its constituents are known to the State of California to cause cancer, birth defects and other reproductive harm.

This page is blank.

Table of Contents

FRAME

57471963 HANDRAIL INSTALLATION 1
57491284 INSTALL–STEP, DC SIDE 3

57474207 DECKING, INSTALLATION 5

57480725 PLATFORM, REAR * 7

UNDERCARRIAGE

57474652 TRACK ASSY–325 W/Y&A MTG* 9
57474660 UNDERCARRIAGE,325L W/Y&A 11
58025818 DRIVE GROUP 13
57415929 FINAL DRIVE GROUP–U/C 15
57354961 FRONT IDLER GROUP 17
57356487 TRACK ADJUSTER GROUP–RH 19
57356495 TRACK ADJUSTER GROUP–LH 21
57356610 SPRING GROUP–RECOIL 23
57356628 FRONT IDLER 25
57354979 ROLLER GROUP 27
57356784 CARRIER ROLLER GROUP 29
57356792 TRACK ROLLER GROUP 31
57354987 TRACK GROUP 33
57356966 TRACK LINK ASSY 35
57354995 TRACK MOTOR GUARD GROUP 37
57355000 TRACK GUIDE GUARD GROUP 39

JACKS

57502395 JACK ASSY, REAR 41

57501249 JACK ASSY, FRONT–STD PADS 43

CAB/CONSOLE

57475824 CAB INSTALL, SWINGING DOOR 45
57448094 CAB,FAB–SWING DR.AC/C4MTG 51
57276909 HEATER, ASSEMBLY–LESS CABLE 55
57202723 PANEL, CONTROL 57
57408783 PRECLEANER/FILTER KIT 59

57483703 GAGES/CONTROLS–HP/QSK/DML 61
57533929 PANEL, ELECTRIC ASSEMBLY–CELECT/HPI 65
57533945 GAUGE ASSEMBLY–ENGINE OIL, QSK 67
57100075 LEVEL 69

57421794 HEATER INSTALL, CAB 71

Table of Contents

57470304 AIR CONDITIONING SYSTEM 73
57450611 EVAPORATOR–DTAC–310–24V 81

TABLE OF CONTENTS

TOWER

57403081 ROTARY HEAD, 4SV–1–7.25 83
57149163 MOTOR,HYDRAULIC–7.25CU IN 91
57480048 SERVO, INPUT–MOTOR A SIDE 93

57445660 ROD CATCHER ASSEMBLY 95

57520033 BREAKOUT COMMONS–SLIDING 97

57525321 ROD CHANGER–5)4–1/2X25' 101
57523425 ROD CHANGER SUB ASSY, 25' 103
57199093 CYLINDER, HYDRAULIC 109
57199051 MOTOR & GEAR REDUCR ASSY* 111

57032880 SPINDLE SUB–4.5/3.5R–19" 115

57423865 ROD SUPPORT ASSY 117
57423808 CYLINDER, HYDRAULIC 123
57425043 SEAL KIT 125

57523391 BOOM, JIB INSTL–25' TOWER 127
52263159 HOIST, JIB 129
50820935 MOTOR, HYDRAULIC 133

57523466 TOWER ASSY, 25FT 135
57423006 BLOCK–PIVOT ASSY–R.H. 143
57423014 BLOCK–PIVOT ASSY–L.H 145

ENGINE

57452401 ENGINE ASSY, QSK19–600 147
57479180 WIRING, ENG. QSK19–600 151

57474702 BATTERY,INSTALL 155

57471872 SILENCER, EXHAUST ASSEMBLY 157

57503534 COOLER/FAN–600HP ENG 159
57494254 COC/HOC/RAD–SIDE BY SIDE 161

57504235 RADIATOR PIPING ASSY–DM45 163

AIR CLEANERS

57471559 AIR FILTERS ASSY 165
57420853 AIR CLEANER 167
57496556 AIR FILTER – 08 169

WARNING: This manual contains data SPECIFIC to the drilling rig with serial number: 7341.

Table of Contents

FUEL

57475691 TANK&PIPING, FUEL–280GAL* 171

57472706 COOLER,FUEL INSTL QSK19 173

57413080 PREHEATER INSTALL–ENGINE 175
57095150 PREHEATER–ENG.COOL.,GAS 179
57095259 TANK, FUEL 181

57133258 INJECTION ASSEMBLY–ETHER 183

AIR SYSTEMS

57472458 COMPRESSOR–HR2.5/1050 * 185
36020519 AIREND–1050HR2.5 187

57475675 PIPING, COMPRESSOR OIL COOLER 189

57481962 PIPING, COMPRESSOR CONTROL 193
57093056 REGULATOR, UL88 203

57481442 PIPING, RECEIVER–HP 205

57475667 PIPING, COMPRESSOR TO RECEIVER 207

57471898 RECEIVER INSTL–HORIZ TNK* 209
57532970 RECEIVER ASSY,HORIZONTAL 211

57475683 PIPING, RECEIVER TO TOWER 213
52223666 THROTTLE VALVE 215

HYDRAULIC

57391120 WRENCH & PIPING INSTALL 217
57039810 KIT,SEAL 219

57450496 DRIVE, MAIN HYDRAULIC–CLOSED LOOP 221
57197410 ALTERATION INSTRUCTION 227
57480386 SERVO, PUMP–INPUT, MANUAL 229
57220857 PUMP, DOUBLE–HYDRAULIC 231
57352544 DRIVE, PUMP–3 HOLE 233

57450777 PIPING, PROPEL–CLSDLOOP * 235

57482564 PIPING, HYDRAULIC TANK 239
52254885 FILTER, HYDRAULIC 243
52259363 FILTER ASSEMBLY–HYDRAULIC 245

57204729 VALVE, 3 SPOOL–INSTALL 247
57204711 VALVE, 3 SPOOL 249
50617091 SECTION, VALVE INLET 251

TABLE OF CONTENTS

Table of Contents

50634336 RELIEF 253
50613199 SECTION, VALVE SPOOL 255
50613207 SECTION, VALVE SPOOL 257
50613728 HANDLE ASSY 259

57448144 VALVE, REGEN–HP 261

57498859 VALVE, 9 SPOOL ASSEMBLY 263
57498842 VALVE, 9SPL–W/2 RLF SECT 265
50617091 SECTION, VALVE INLET 267
50634336 RELIEF 269
50613199 SECTION, VALVE SPOOL 271
50613207 SECTION, VALVE SPOOL 273
50613215 SECTION, VALVE SPOOL 275
50613728 HANDLE ASSY 277

57450629 PIPING,MAIN HYD–CLSDLOOP 279
57450751 VALVE ASSY, DIVERTER * 291
57106429 VALVE, DIVERTER 293
50630656 FILTER, MAGNETIC 295
57169997 VALVE ASSEMBLY * 297

57116774 PIPING, JACKS 299

57320046 CONTROLS, OVER PRESSURE 301

57296196 CONTROL, TORQUE LIMIT 303
52236932 VALVE, PRESSURE–REMOTE 305

57474751 PIPING, FAN/HOC–54" FAN 307

57523474 PIPING, TOWER–25 FT 311

57448219 CONTROL, HOLDBACK SYSTEM 317

57431942 PIPING, GEAR INDEXER 319

57229445 CONTROLS, PULLDOWN SYSTEM 323

57523417 PIPING, ROD CHANGER–25FT 325

57207151 PIPING, NO–BUMP ROD CHANGER 327

57388803 PINNING, TOWER–INSTALL 333

57395147 CONTROLS, SPEED 337

57523409 TOWER RAISE CYL INSTL–25' 339

ELECTRICAL

57450132 WIRING, BASIC–QSK 343

57157869 LIGHTS, NIGHT 353

TABLE OF CONTENTS

WARNING: This manual contains data SPECIFIC to the drilling rig with serial number: 7341.

Table of Contents

OPTIONS

57404725 DUST COLLECTR INSTALL–3600 357
57284309 DUST COLLECTOR–IR 3600 365
57003782 MOTOR, HYDRAULIC 367

57474736 WATER INJ–200 GALS, 8 GPM 369
50822147 PUMP, WATER–8 GPM 373
52235207 MOTOR, HYDRAULIC 375

57244386 LUBE SYSTEM, FRAME & TRACK 377

57481509 LUBE, INJECTION–DHD,60 GAL 381
57354755 LUBRICATOR ASSEMBLY–60 GAL DHD 385
57354094 TANK, DHD LUBE–60 GAL. 389

57523482 LUBE, TWR–25'DMC,MANIFOLD 391

57532749 DC ANGLE/TELESCOPIC ASSEMBLY 395

TOOLS

50622604 SEAL,ROD–4.5 IN ROD 401

57328205 FILTER KIT, FIELD REPLACE 403

57059370 DECALS, COMMONS * 405

57490575 NAMEPLATES, ENGLISH 407

TABLE OF CONTENTS

57471963 HANDRAIL INSTALLATION

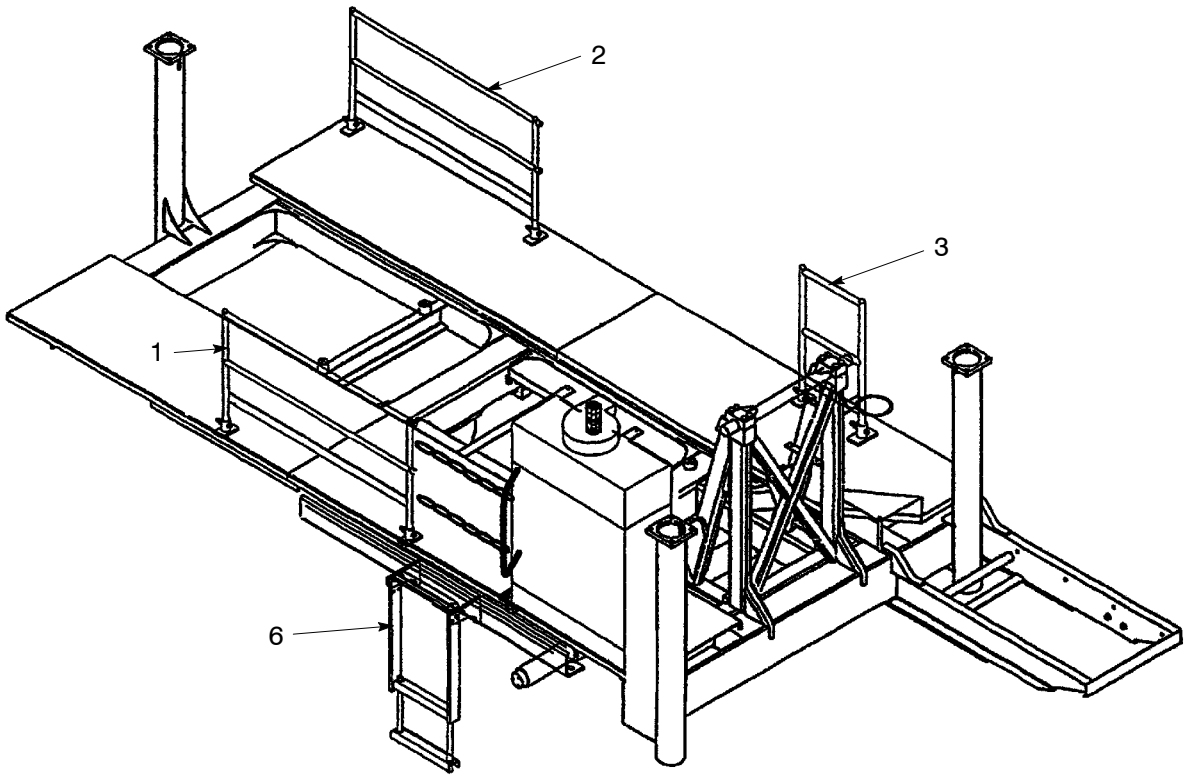

Figure 1 :HANDRAIL INSTALLATION
E57471963 REV 001

WARNING: This manual contains data SPECIFIC to the drilling rig with serial number: 7341.

57471963 HANDRAIL INSTALLATION

REF.	PART NO.	QTY.	UNIT	DESCRIPTION	
001	57481236	1	EA	HANDRAIL ASSY	
002	57471989	1	EA	HANDRAIL ASSY	
003	57424400	1	EA	HANDRAIL ASSY	
006	57491284	1	AS	INSTL–STEP, DC SIDE	*(See figure 2)*

57491284 INSTALL – STEP, DC SIDE

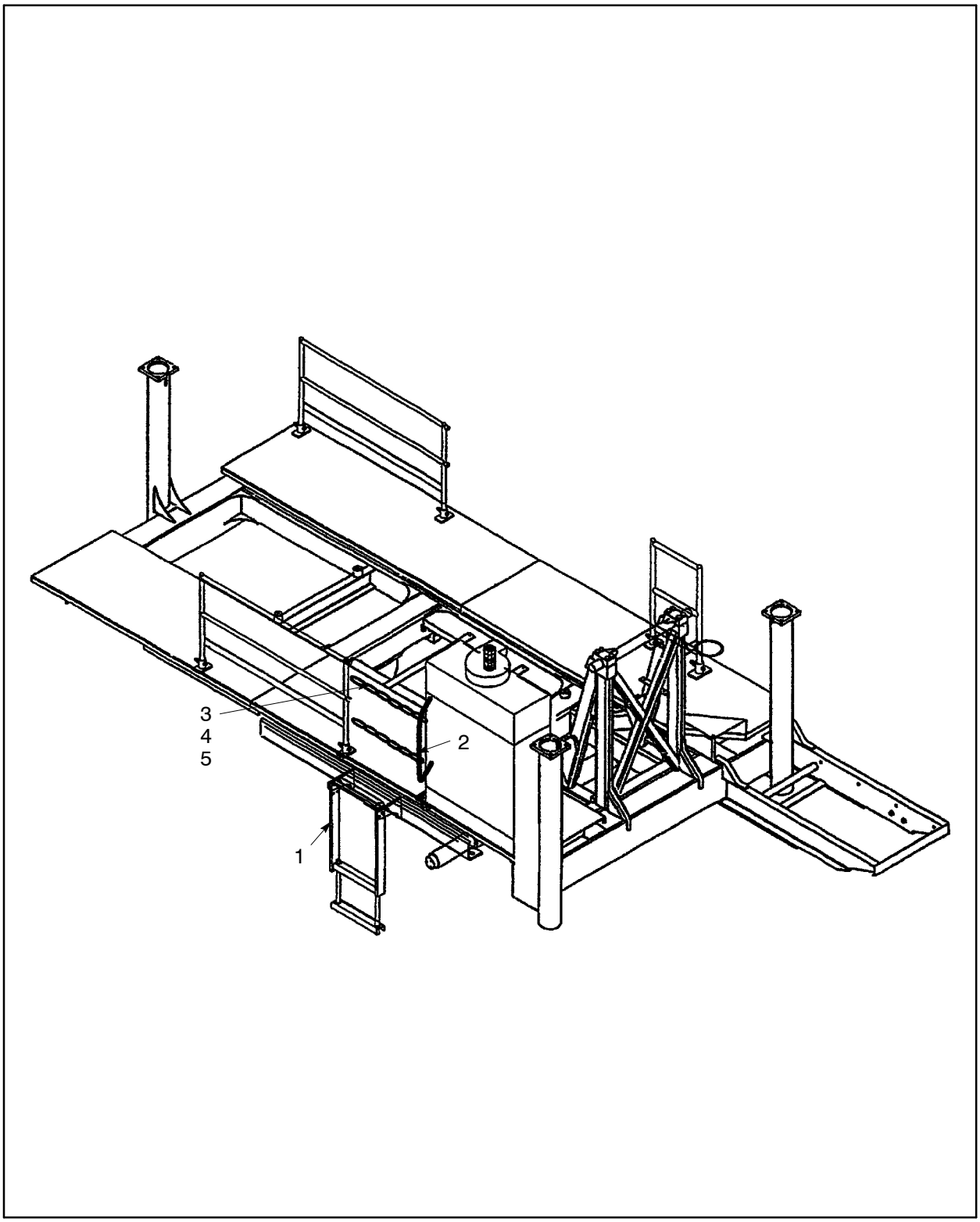

Figure 2 :INSTALL – STEP, DC SIDE
C57491284 REV 01

WARNING: This manual contains data SPECIFIC to the drilling rig with serial number: 7341.

57491284 INSTALL–STEP, DC SIDE

REF.	PART NO.	QTY.	UNIT	DESCRIPTION
001	57491276	1	EA	LADDER–STEP, DC SIDE
002	57455271	1	EA	HANDLE–STEP
003	56801053	2	EA	LINK
004	50699321	30.00	IN	CHAIN, BULK–3/16 COIL
004	50699321	30.00	IN	CHAIN, BULK–3/16 COIL
005	56957012	2	EA	SNAP,SWIVEL

57474207 DECKING, INSTALLATION

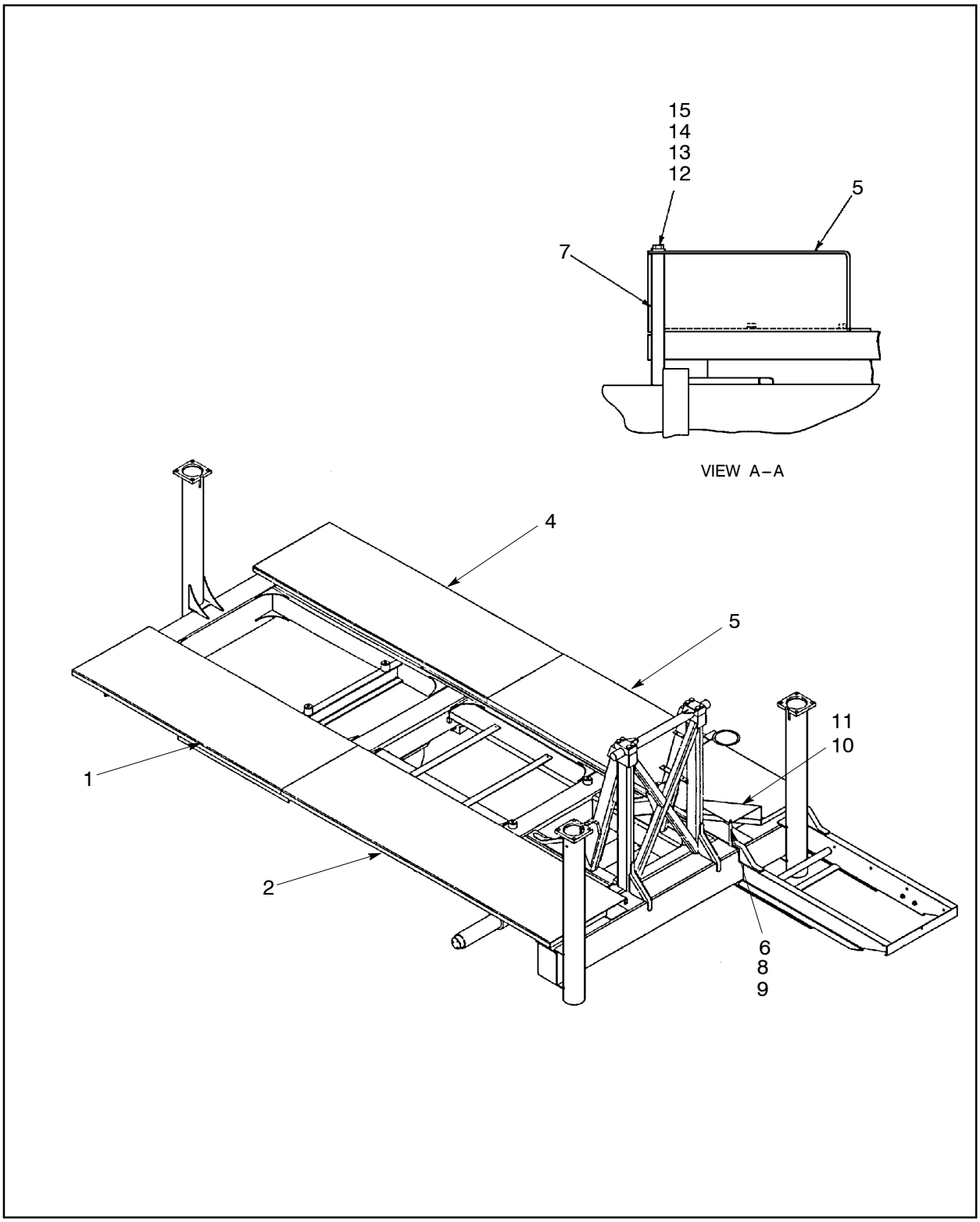

Figure 3 :DECKING, INSTALLATION
E57474207 REV 001

WARNING: This manual contains data SPECIFIC to the drilling rig with serial number: 7341.

57474207 DECKING, INSTALLATION

REF.	PART NO.	QTY.	UNIT	DESCRIPTION
001	57474637	1	EA	DECKING,REAR,
002	57474587	1	EA	DECKING,FRONT
004	57474595	1	EA	DECKING,REAR
005	57474215	1	EA	DECKING,FRONT
006	57328148	1	EA	COVER, HOSE
007	57475956	1	EA	SUPPORT ROD–HOSE COVER
008	95104170	1	EA	SCREW, CAP–1/2–13 X 1–1/2
009	95081824	2	EA	WASHER, LOCK–1/2
010	95081667	22	EA	WASHER, FLAT–1/2
011	95077798	22	EA	NUT, HEX–1/2–13
012	95920674	4	EA	SCREW, CAP–3/8–16 X 1
013	95922233	4	EA	WASHER, FLAT–3/8
014	95937413	4	EA	WASHER, LOCK–3/8 PLATED
015	95922894	4	EA	NUT, HEX–3/8–16

57480725 PLATFORM, REAR *

PLATFORM, REAR * 57480725

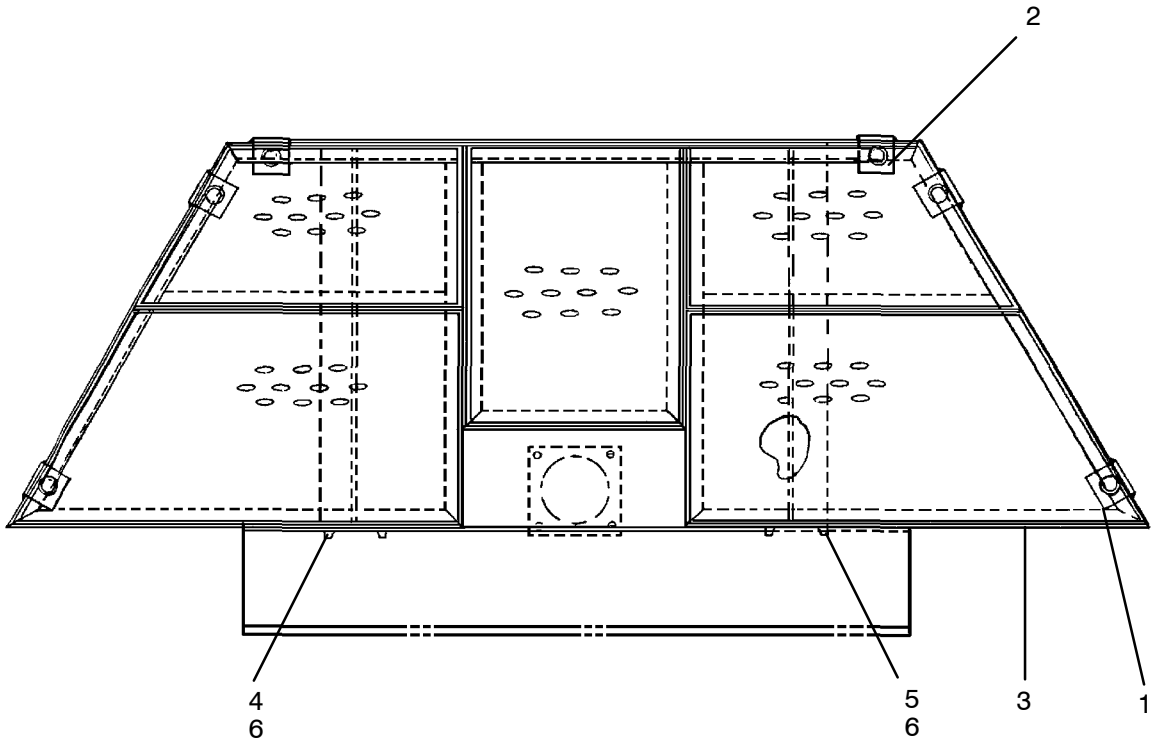

Figure 4 :PLATFORM, REAR *

D57480725 REV 02

WARNING: This manual contains data SPECIFIC to the drilling rig with serial number: 7341.

57480725 PLATFORM, REAR *

REF.	PART NO.	QTY.	UNIT	DESCRIPTION
001	57455842	2	EA	HANDRAIL – 38”
002	57455859	1	EA	HANDRAIL – 70”
003	57480451	1	EA	FRAME PLATFORM
004	57455941	1	EA	SUPPORT – L.H.
005	57455958	1	EA	SUPPORT – R.H.
006	57455966	2	EA	BRACKET

57474652 TRACK ASSY–325 W/Y&A MTG*

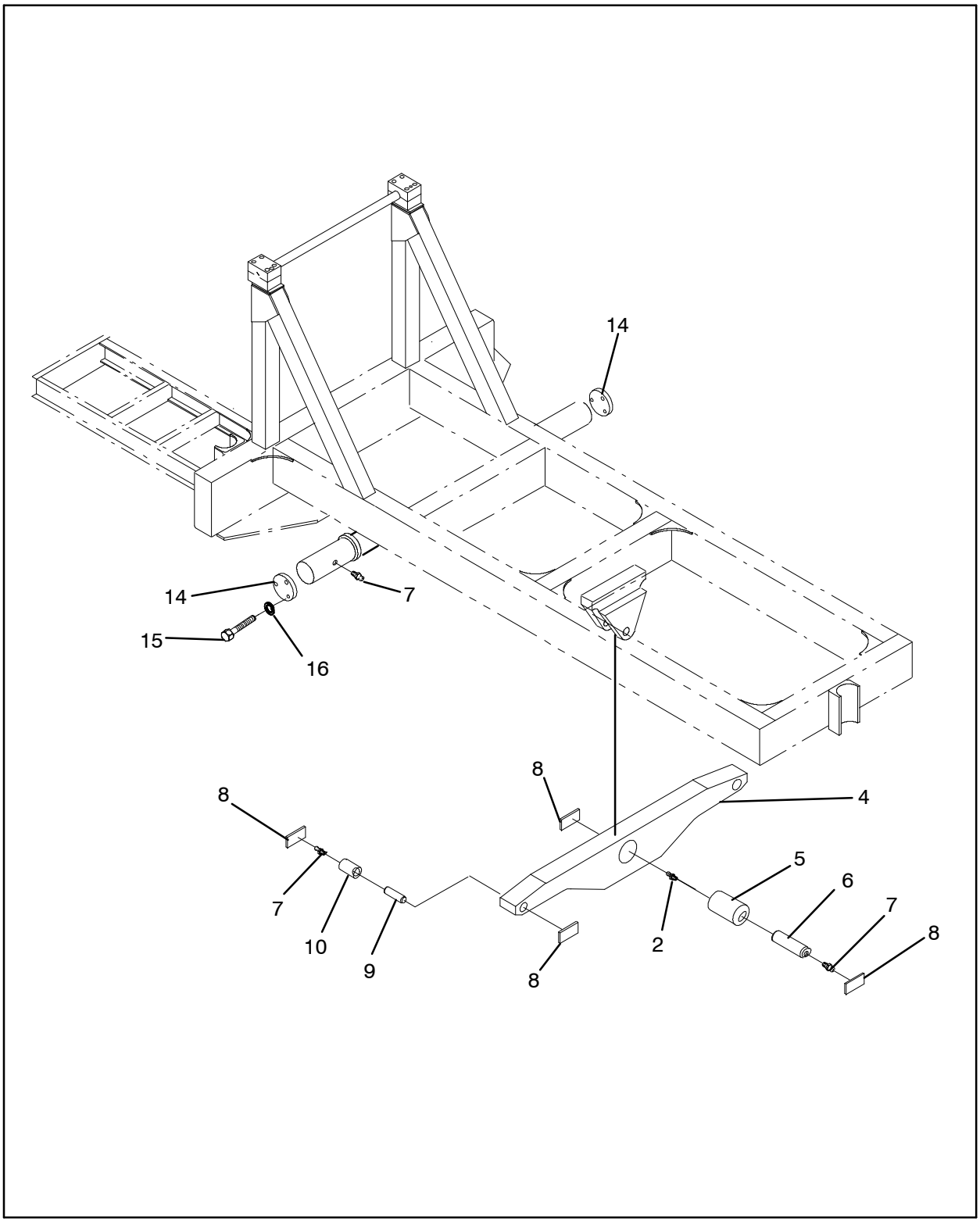

Figure 5 :TRACK ASSY–325 W/Y&A MTG*
D57474652 REV00

WARNING: This manual contains data SPECIFIC to the drilling rig with serial number: 7341.

57474652 TRACK ASSY–325 W/Y&A MTG*

REF.	PART NO.	QTY.	UNIT	DESCRIPTION	
001	57474660	1	EA	UNDERCARRIAGE,325L W/Y&A	*(See figure 6)*
002	95201281	1	EA	FITTING, LUBE	
004	57309783	1	EA	YOKE, OSCILLATION	
005	57180184	1	EA	BUSHING, CENTER	
006	57180168	1	EA	PIN, CENTER	
007	95201281	6	EA	FITTING, LUBE	
008	56901853	6	EA	BAR, FLAT	
009	57188112	2	EA	PIN, END YOKE	
010	57309791	2	EA	BUSHING, YOKE END	
014	52264652	2	EA	RETAINER,TRACK	
015	95378642	6	EA	SCREW,CAP–3/4–10 X 2–1/4	
016	95081808	6	EA	WASHER, LOCK–3/4	

57474660 UNDERCARRIAGE,325L W/Y&A

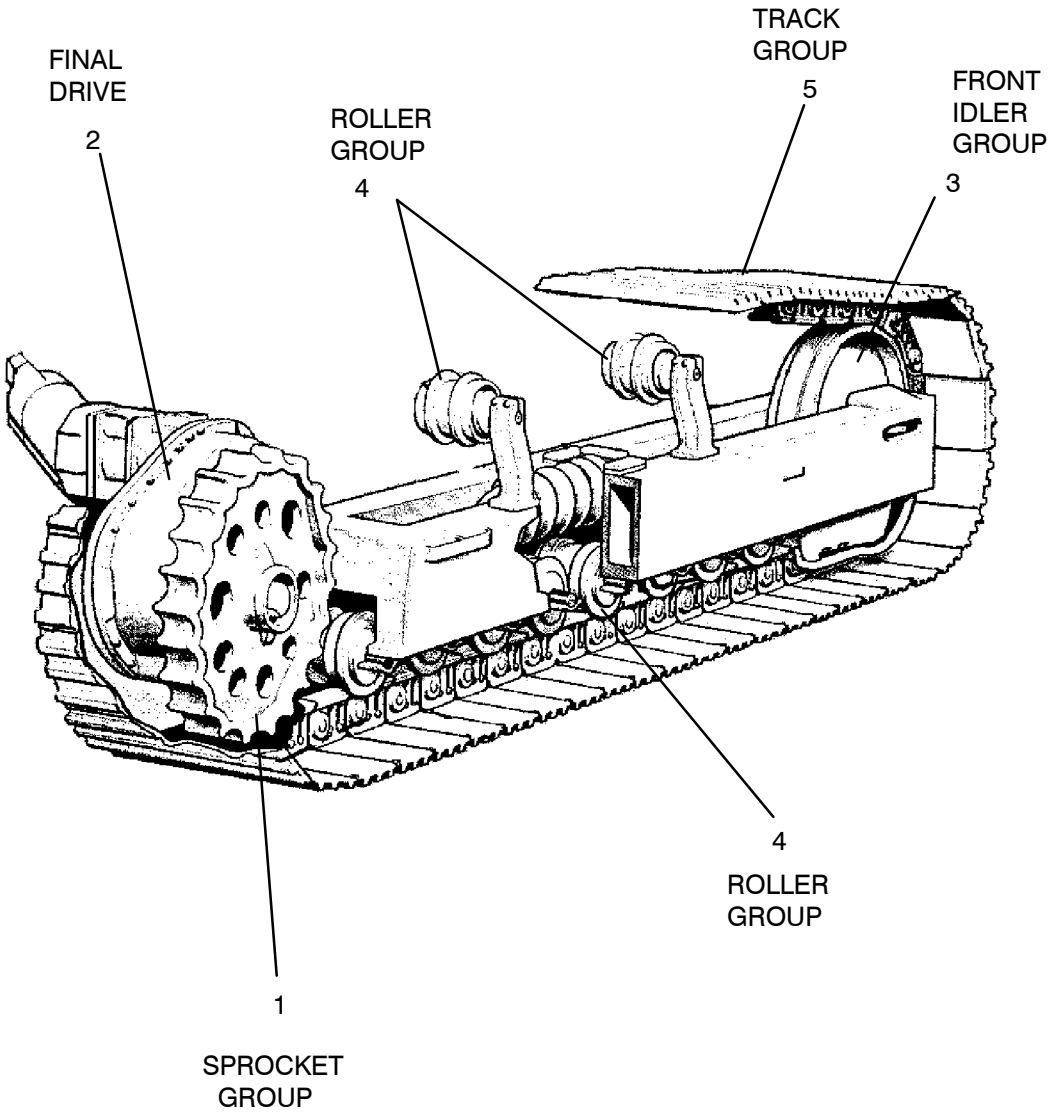

Figure 6 :UNDERCARRIAGE,325L W/Y&A
ILLUSTRATION

57474660 UNDERCARRIAGE,325L W/Y&A

REF.	PART NO.	QTY.	UNIT	DESCRIPTION	
001	57354946	2	EA	SPROCKET GROUP	
	57355018	1	EA	● - SPROCKET, TRACK	
	57355026	18	EA	● - BOLT	
002	58025800	2	EA	FINAL DRIVE	
	58025818	1	EA	● - DRIVE GROUP	*(See figure 7)*
	57355075	40	EA	● - WASHER–PLATED	
	57356461	40	EA	● - BOLT	
003	57354961	2	EA	FRONT IDLER GROUP	*(See figure 9)*
004	57354979	2	EA	ROLLER GROUP	*(See figure 14)*
005	57354987	2	EA	TRACK GROUP	*(See figure 17)*
006	57354995	2	EA	TRACK MOTOR GUARD GROUP	*(See figure 19)*
007	57355000	2	EA	TRACK GUIDE GUARD GROUP	*(See figure 20)*

58025818 DRIVE GROUP

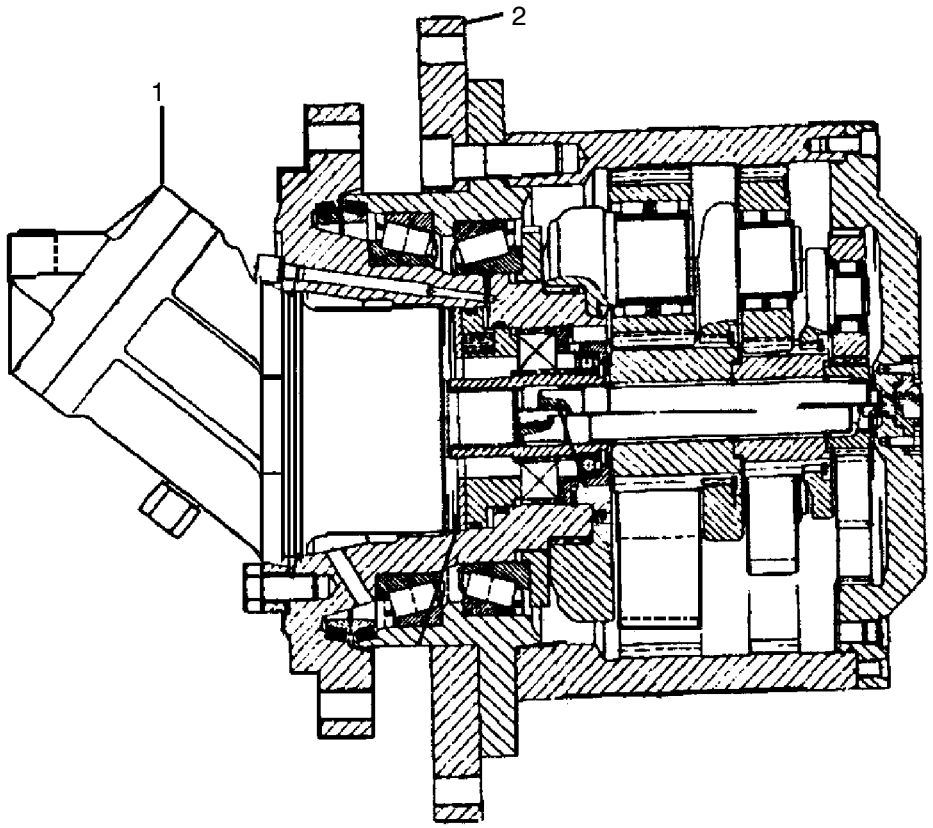

Figure 7 :DRIVE GROUP
ILLUSTRATION

58025818 DRIVE GROUP

REF.	PART NO.	QTY.	UNIT	DESCRIPTION	
000	57457293	1	EA	KIT – DISC(BRAKE)	
000	57457301	1	EA	KIT – SEAL(BRAKE)	
001	57415044	1	EA	MOTOR, HYD. TRACK/DR	
002	57415929	1	EA	FINAL DRIVE GROUP – U/C	*(See figure 8)*

57415929 FINAL DRIVE GROUP – U/C

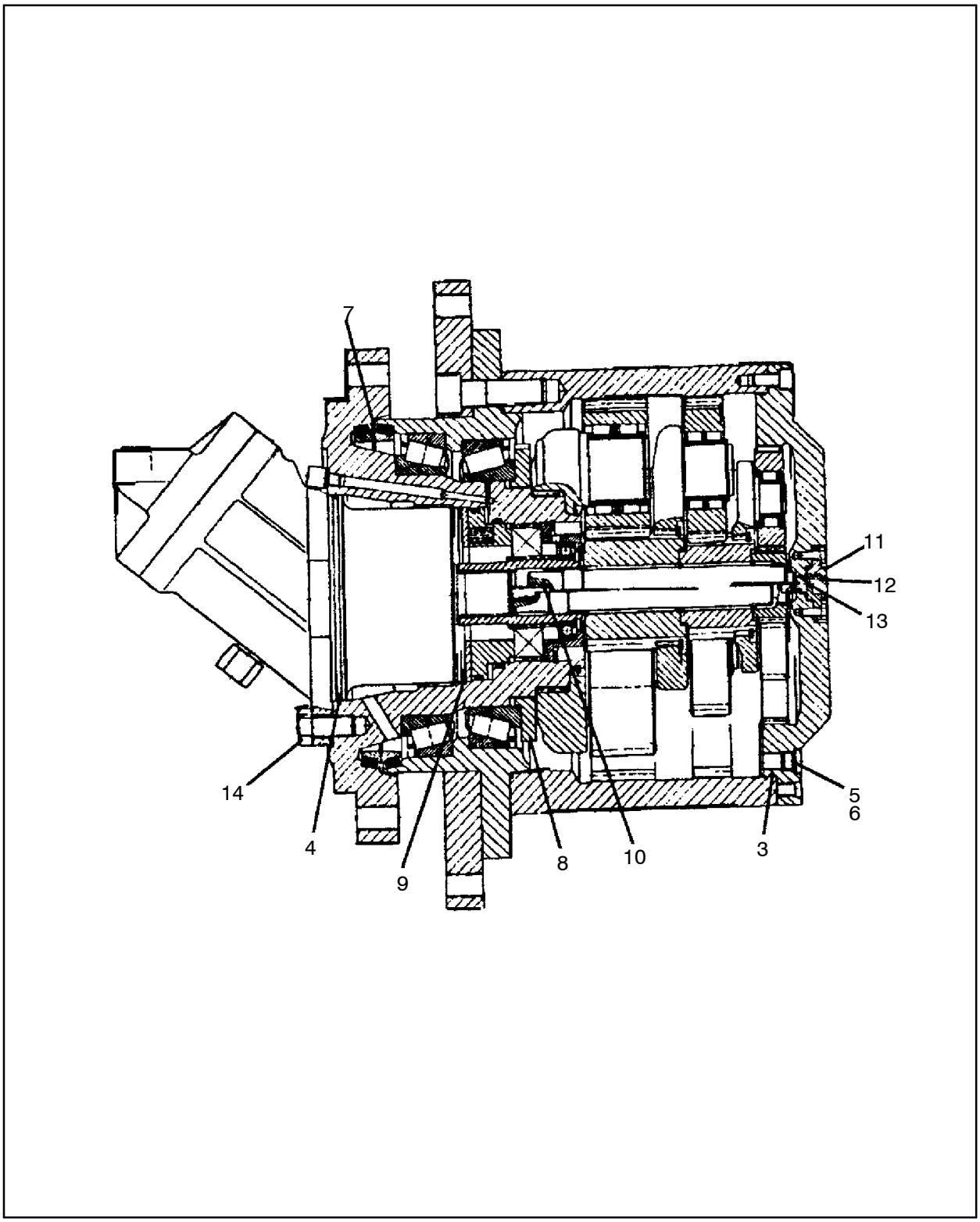

Figure 8 :FINAL DRIVE GROUP – U/C
ILLUSTRATION

57415929 FINAL DRIVE GROUP – U/C

REF.	PART NO.	QTY.	UNIT	DESCRIPTION
003	57456246	1	EA	SEAL
004	57417313	1	EA	SEAL
005	57456261	4	EA	PLUG
006	57456279	4	EA	SEAL
007	58025834	1	EA	SEAL
008	58025842	1	EA	NUT
009	57457244	1	EA	RING
010	58025859	1	EA	SPRING
011	57457269	1	EA	COVER
012	57457277	1	EA	BUTTON
013	57457285	1	EA	SEAL
014	57357683	2	EA	BOLT

57354961 FRONT IDLER GROUP

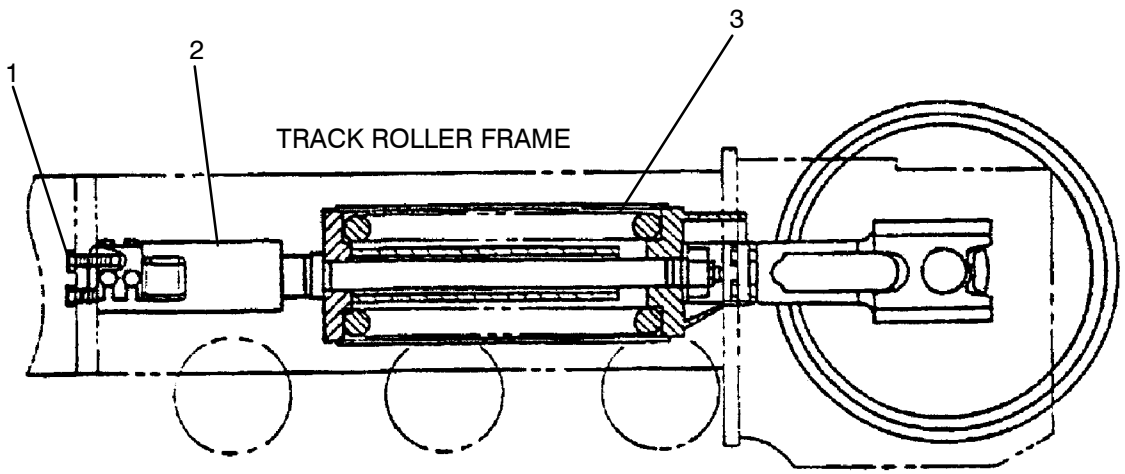

Figure 9 :FRONT IDLER GROUP
ILLUSTRATION

57354961 FRONT IDLER GROUP

REF.	PART NO.	QTY.	UNIT	DESCRIPTION	
001	57356479	4	EA	BOLT	
002	57356487	1	EA	TRACK ADJUSTER GROUP–RH	*(See figure 10)*
002	57356495	1	EA	TRACK ADJUSTER GROUP–LH	*(See figure 11)*
003	57356503	2	EA	FRONT IDLER GROUP	
	57356610	1	EA	● - SPRING GROUP–RECOIL	*(See figure 12)*
	57355026	4	EA	● - BOLT	
	57356628	1	EA	● - FRONT IDLER	*(See figure 13)*

57356487 TRACK ADJUSTER GROUP – RH

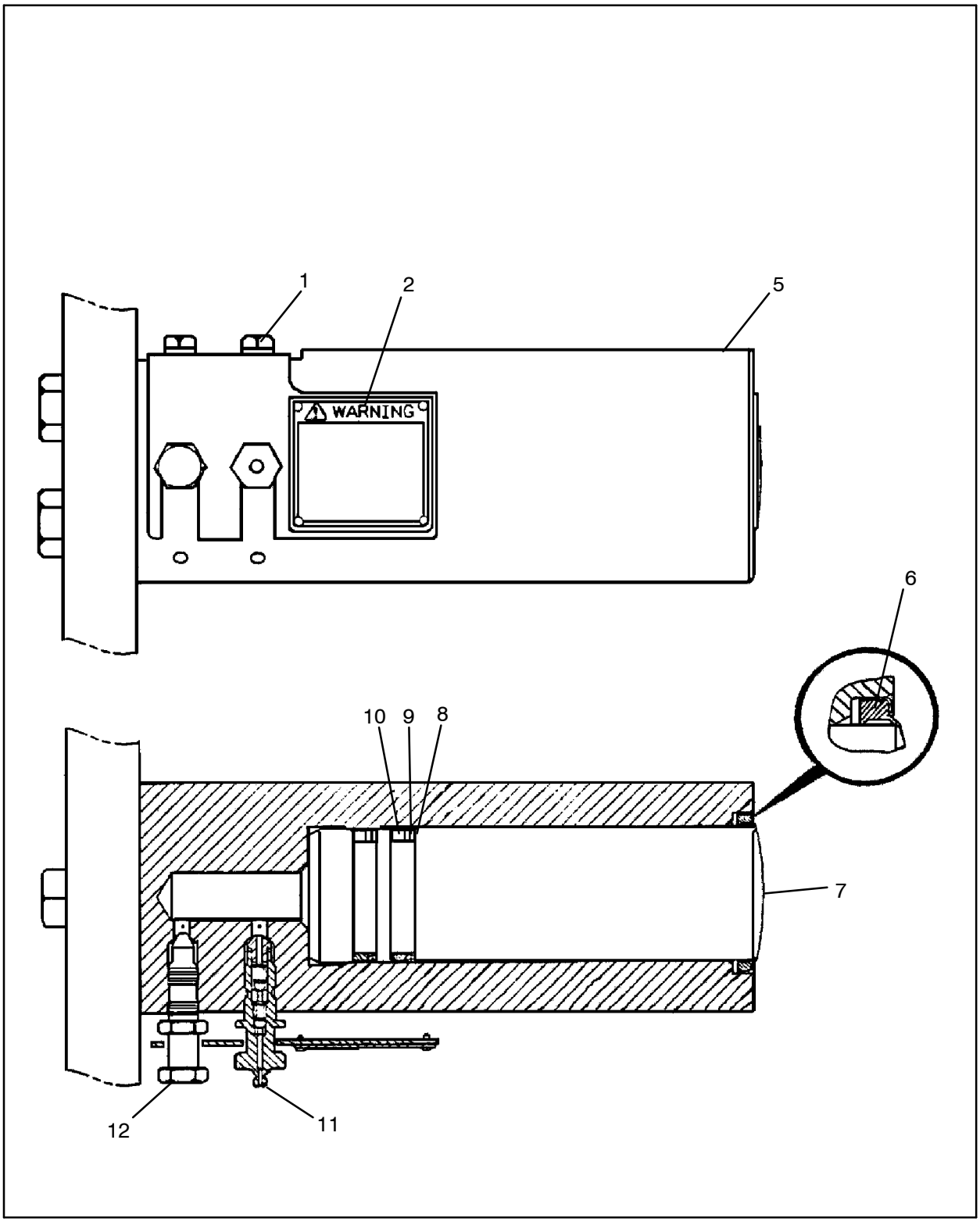

Figure 10 :TRACK ADJUSTER GROUP – RH
ILLUSTRATION

57356487 TRACK ADJUSTER GROUP–RH

REF.	PART NO.	QTY.	UNIT	DESCRIPTION
001	57356511	2	EA	BOLT
002	57356529	1	EA	RH PLATE ASSY–WARNING
005	57356545	1	EA	CYLINDER
006	57356552	1	EA	SEAL–LIP TYPE
007	57356560	1	EA	PISTON
008	57356578	2	EA	RING
009	57356586	2	EA	RING
010	57356594	2	EA	O RING–SEAL
011	57356602	1	EA	FILL VALVE
012	50416551	1	EA	VALVE

57356495 TRACK ADJUSTER GROUP – LH

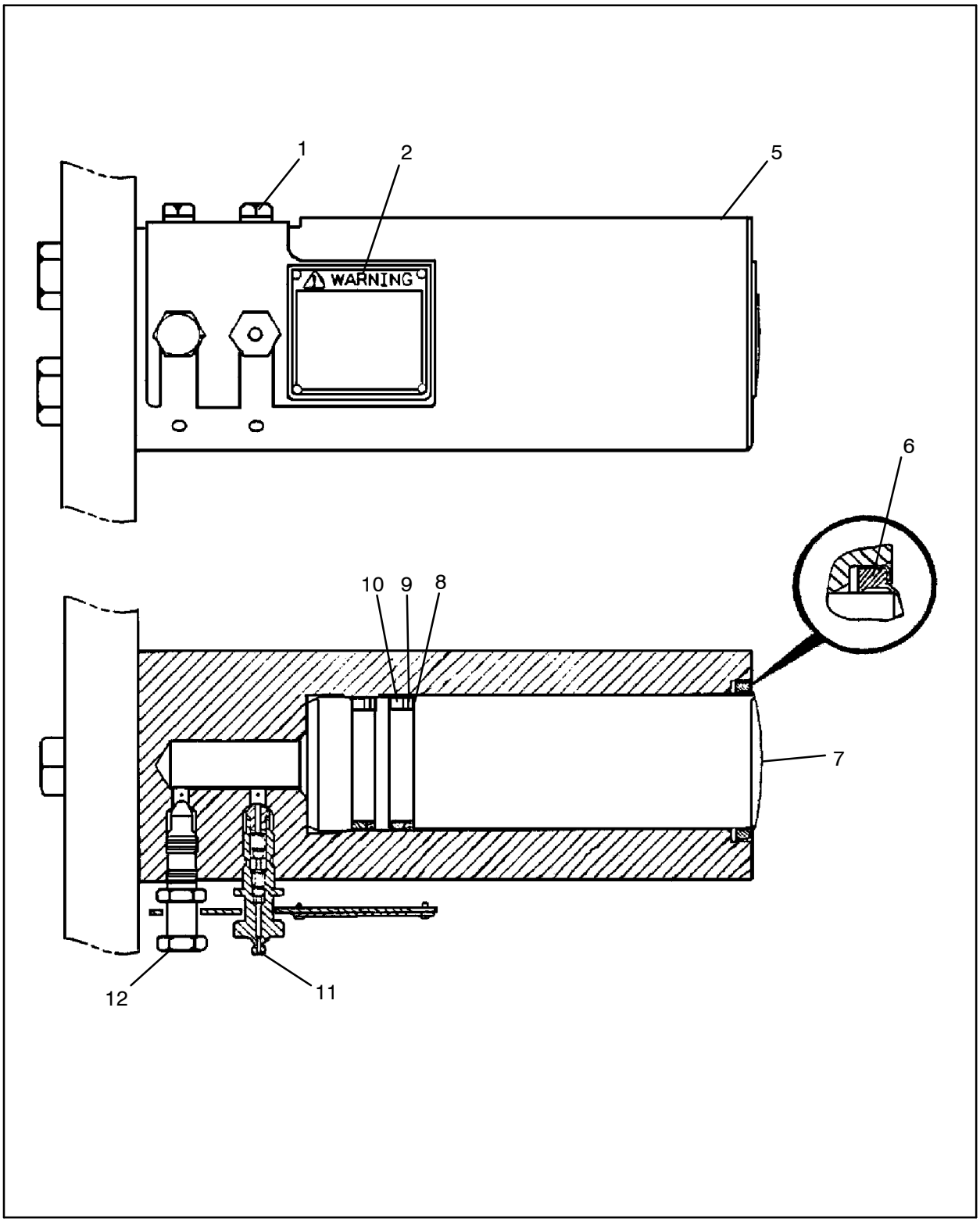

Figure 11 :TRACK ADJUSTER GROUP – LH
ILLUSTRATION

57356495 TRACK ADJUSTER GROUP–LH

REF.	PART NO.	QTY.	UNIT	DESCRIPTION
001	57356511	2	EA	BOLT
002	57356537	1	EA	LH PLATE ASSY–WARNING
005	57356545	1	EA	CYLINDER
006	57356552	1	EA	SEAL–LIP TYPE
007	57356560	1	EA	PISTON
008	57356578	2	EA	RING
009	57356586	2	EA	RING
010	57356594	2	EA	O RING–SEAL
011	57356602	1	EA	FILL VALVE
012	50416551	1	EA	VALVE

57356610 SPRING GROUP – RECOIL

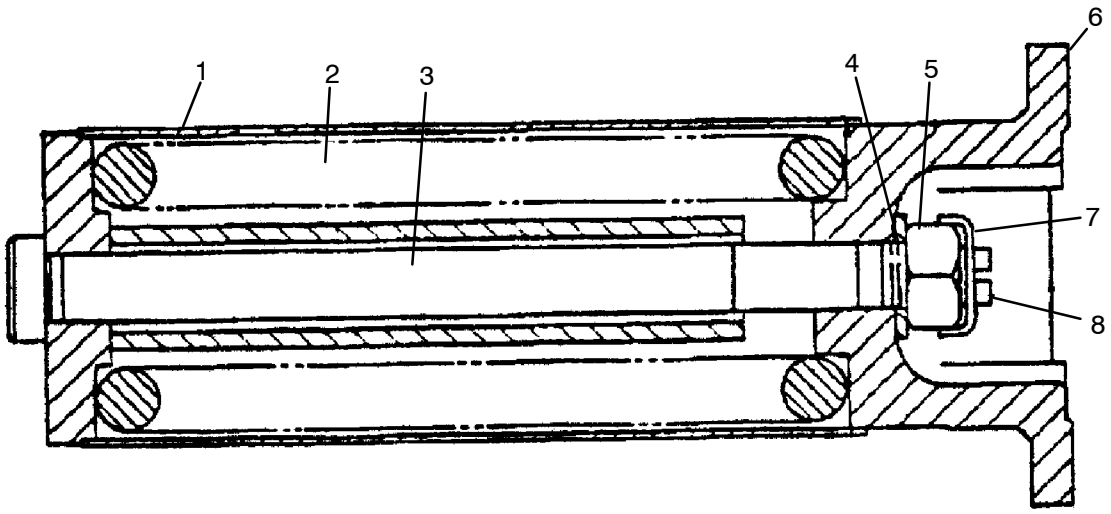

Figure 12 :SPRING GROUP – RECOIL
ILLUSTRATION

WARNING: This manual contains data SPECIFIC to the drilling rig with serial number: 7341.

57356610 SPRING GROUP–RECOIL

REF.	PART NO.	QTY.	UNIT	DESCRIPTION
001	57356636	1	EA	SUPPORT ASSY
002	57356644	1	EA	SPRING
003	57356651	1	EA	ROD
004	57356669	1	EA	WASHER–HARD
005	57356677	1	EA	NUT
006	57356685	1	EA	SUPPORT
007	57356693	1	EA	STRIP
008	57356701	2	EA	BOLT–SOCKETHEAD

57356628 FRONT IDLER

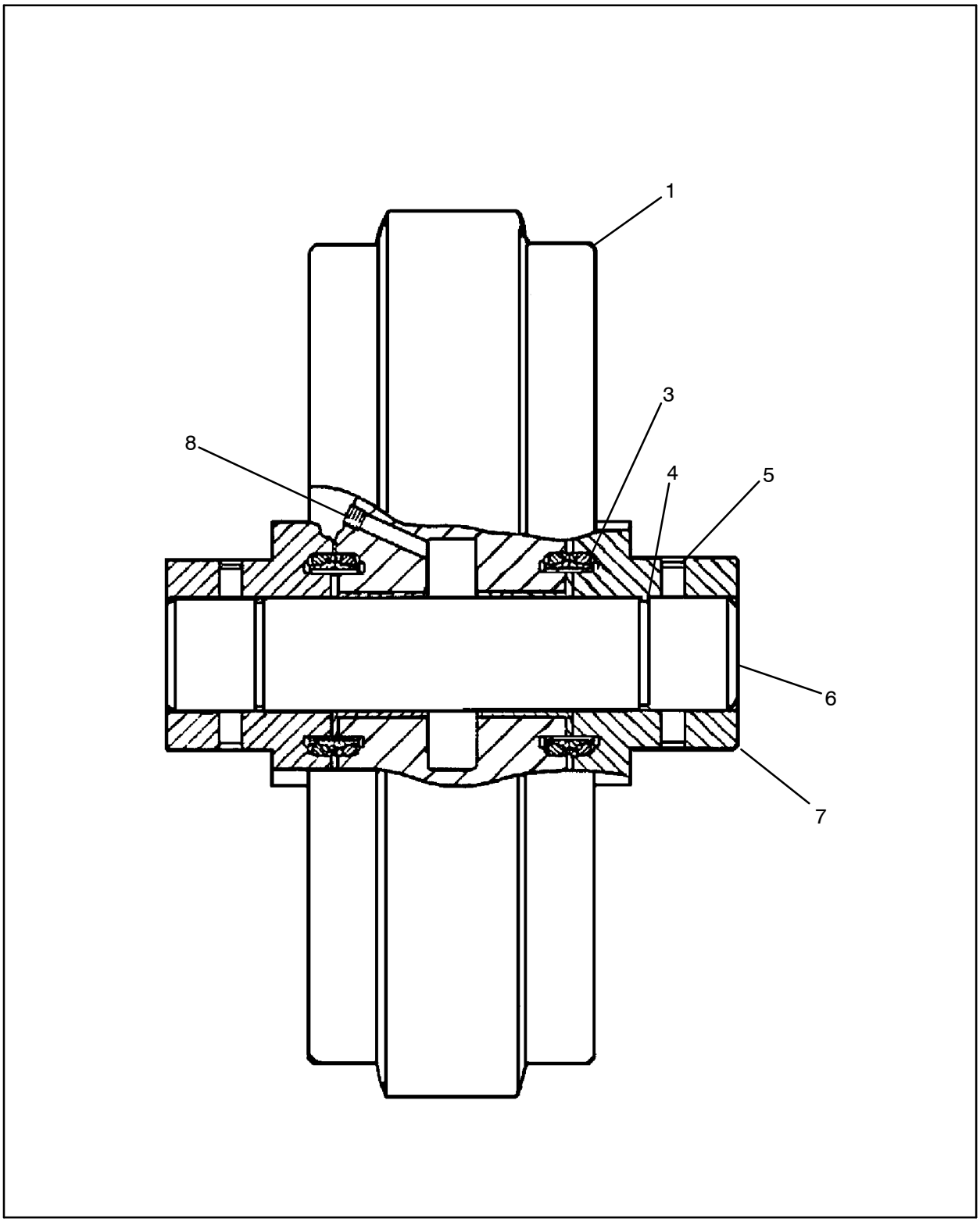

Figure 13 :FRONT IDLER
ILLUSTRATION

57356628 FRONT IDLER

REF.	PART NO.	QTY.	UNIT	DESCRIPTION
001	57356719	1	EA	IDLER & BEARING ASSY
003	57356727	2	EA	SEAL GROUP–METAL FACE
004	57027310	2	EA	SEAL
005	57356735	2	EA	PIN
006	57356743	1	EA	SHAFT–IDLER
007	57356750	2	EA	BEARING–FRAME IDLER
008	57356768	1	EA	PLUG–PIPE

57354979 ROLLER GROUP

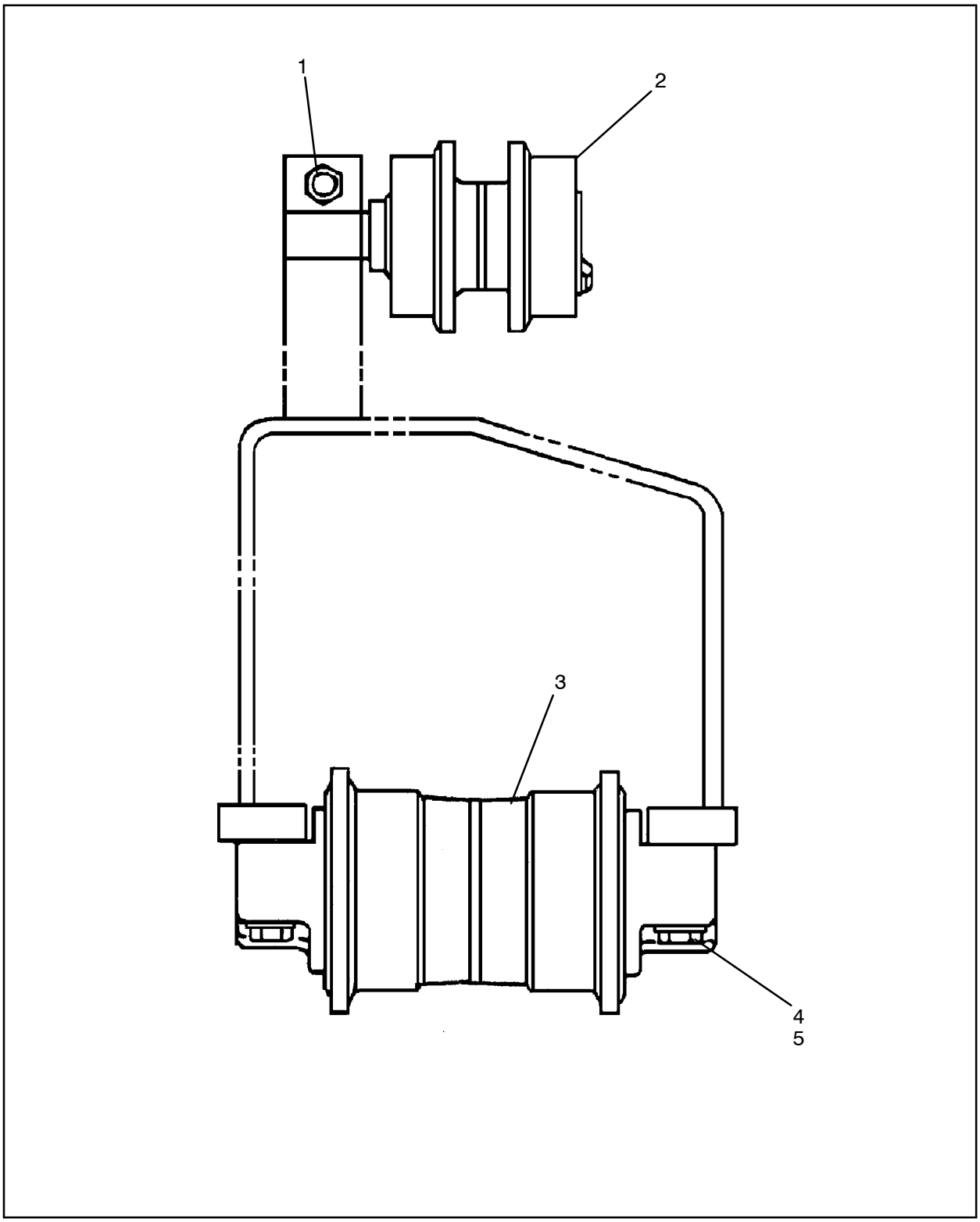

Figure 14 :ROLLER GROUP
ILLUSTRATION

WARNING: This manual contains data SPECIFIC to the drilling rig with serial number: 7341.

57354979 ROLLER GROUP

REF.	PART NO.	QTY.	UNIT	DESCRIPTION	
001	57356776	4	EA	BOLT	
002	57356784	4	EA	CARRIER ROLLER GROUP	*(See figure 15)*
003	57356792	20	EA	TRACK ROLLER GROUP	*(See figure 16)*
004	57356800	80	EA	BOLT	
005	57355075	80	EA	WASHER–PLATED	

57356784 CARRIER ROLLER GROUP

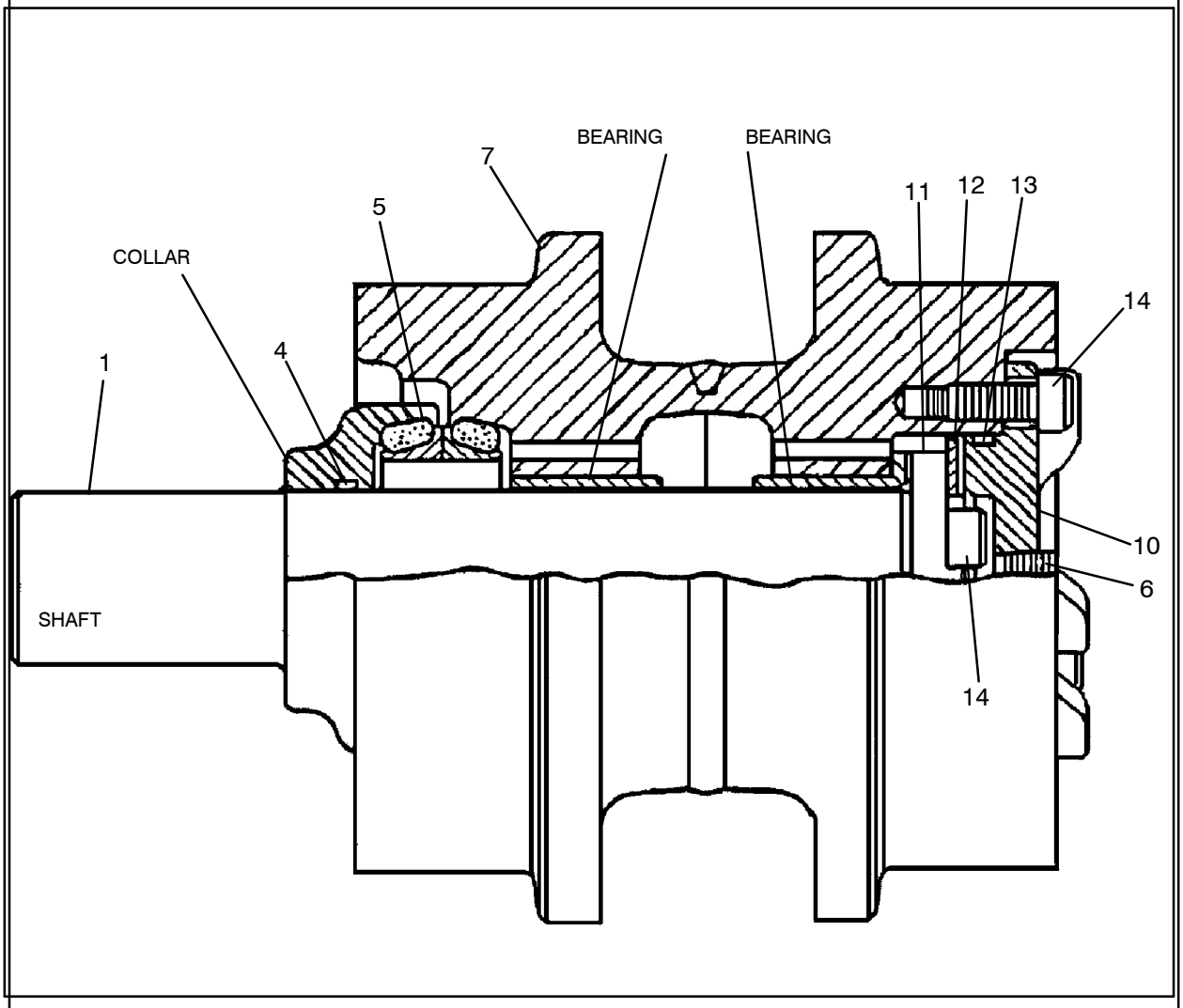

Figure 15 :CARRIER ROLLER GROUP
ILLUSTRATION

57356784 CARRIER ROLLER GROUP

REF.	PART NO.	QTY.	UNIT	DESCRIPTION
001	57356826	1	EA	SHAFT ASSY–TRACK ROLLER
004	50727734	1	EA	SEAL
005	50727031	1	EA	SEAL GROUP–DUO CONE
006	57356768	1	EA	PLUG–PIPE
007	57356842	1	EA	ROLLER & BEARING ASSY
010	57356834	1	EA	COVER–CARRIER ROLLER
011	57356859	1	EA	RETAINER
012	57356867	1	EA	WASHER–THRUST
013	50727429	1	EA	SEAL
014	57356875	5	EA	BOLT–SOCKETHEAD

57356792 TRACK ROLLER GROUP

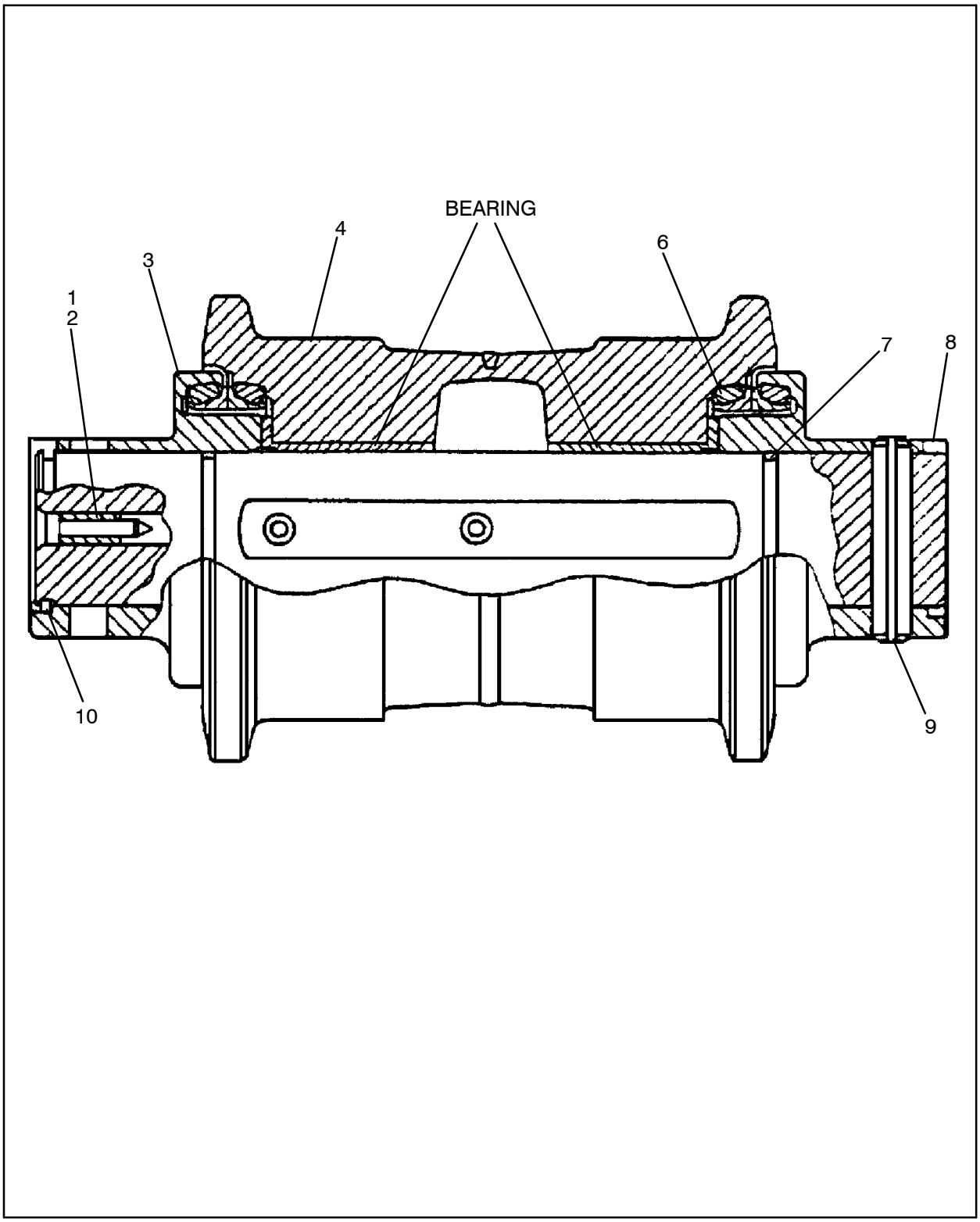

Figure 16 :TRACK ROLLER GROUP
ILLUSTRATION

57356792 TRACK ROLLER GROUP

REF.	PART NO.	QTY.	UNIT	DESCRIPTION
001	57356883	1	EA	STOPPER – RUBBER
002	57356891	1	EA	PLUG – CLEAR
003	57356909	2	EA	COLLAR – TRACK ROLLER
004	57356917	1	EA	ROLLER & BEARING ASSY
006	57183014	2	EA	SEAL GP.
007	57356925	2	EA	O RING – SEAL
008	57356933	1	EA	SHAFT – TRACK ROLLER
009	57356941	1	EA	PIN
010	57356958	1	EA	RING – RETAINING

57354987 TRACK GROUP

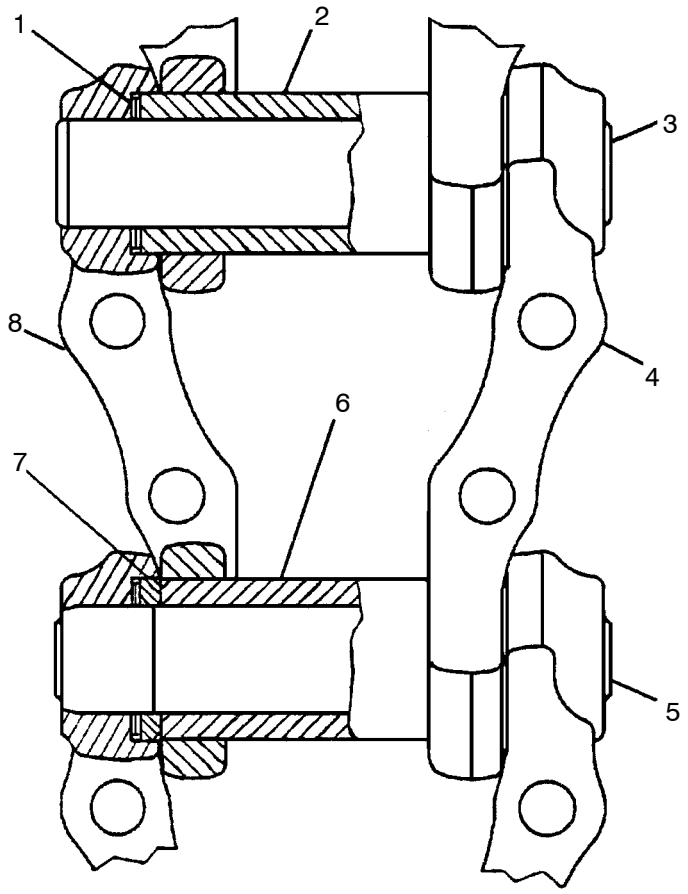

Figure 17 :TRACK GROUP
ILLUSTRATION

57354987 TRACK GROUP

REF.	PART NO.	QTY.	UNIT	DESCRIPTION	
001	57356966	1	EA	TRACK LINK ASSY	*(See figure 18)*
001	57356974	180	EA	BOLT–TRACK	
001	57356982	45	EA	SHOE–TRACK	
001	57356990	180	EA	NUT–TRACK	

57356966 TRACK LINK ASSY

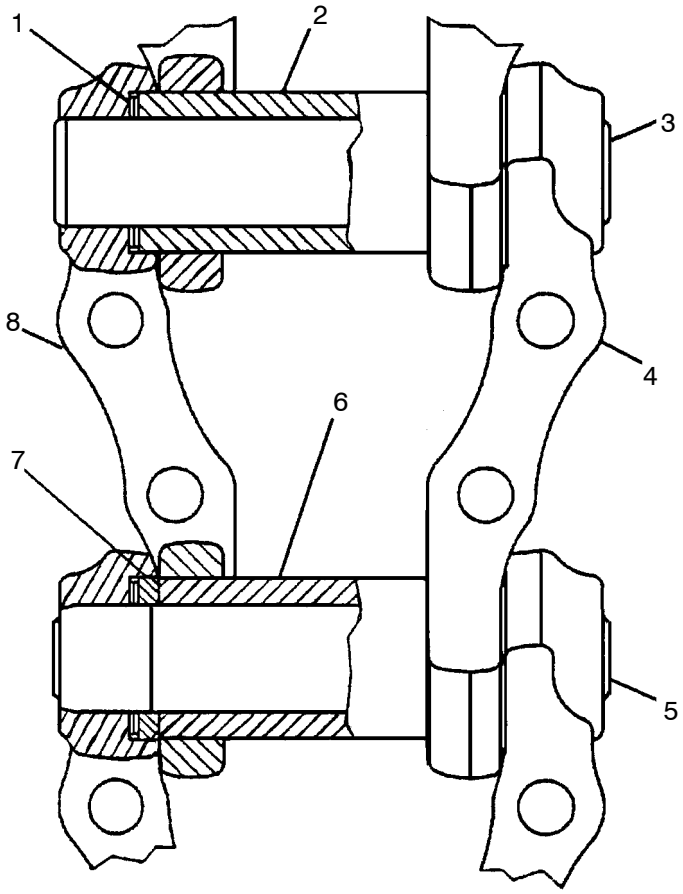

Figure 18 :TRACK LINK ASSY
ILLUSTRATION

57356966 TRACK LINK ASSY

REF.	PART NO.	QTY.	UNIT	DESCRIPTION
001	57357006	192	EA	WASHER
002	57357014	47	EA	BUSHING–TRACK
003	57357022	47	EA	PIN–TRACK
004	57357030	48	EA	LINK–LH TRACK
005	57357048	1	EA	PIN–TRACK
006	57357055	1	EA	BUSHING–MASTER
007	57357063	2	EA	SPACER
008	57357071	48	EA	LINK–RH TRACK

57354995 TRACK MOTOR GUARD GROUP

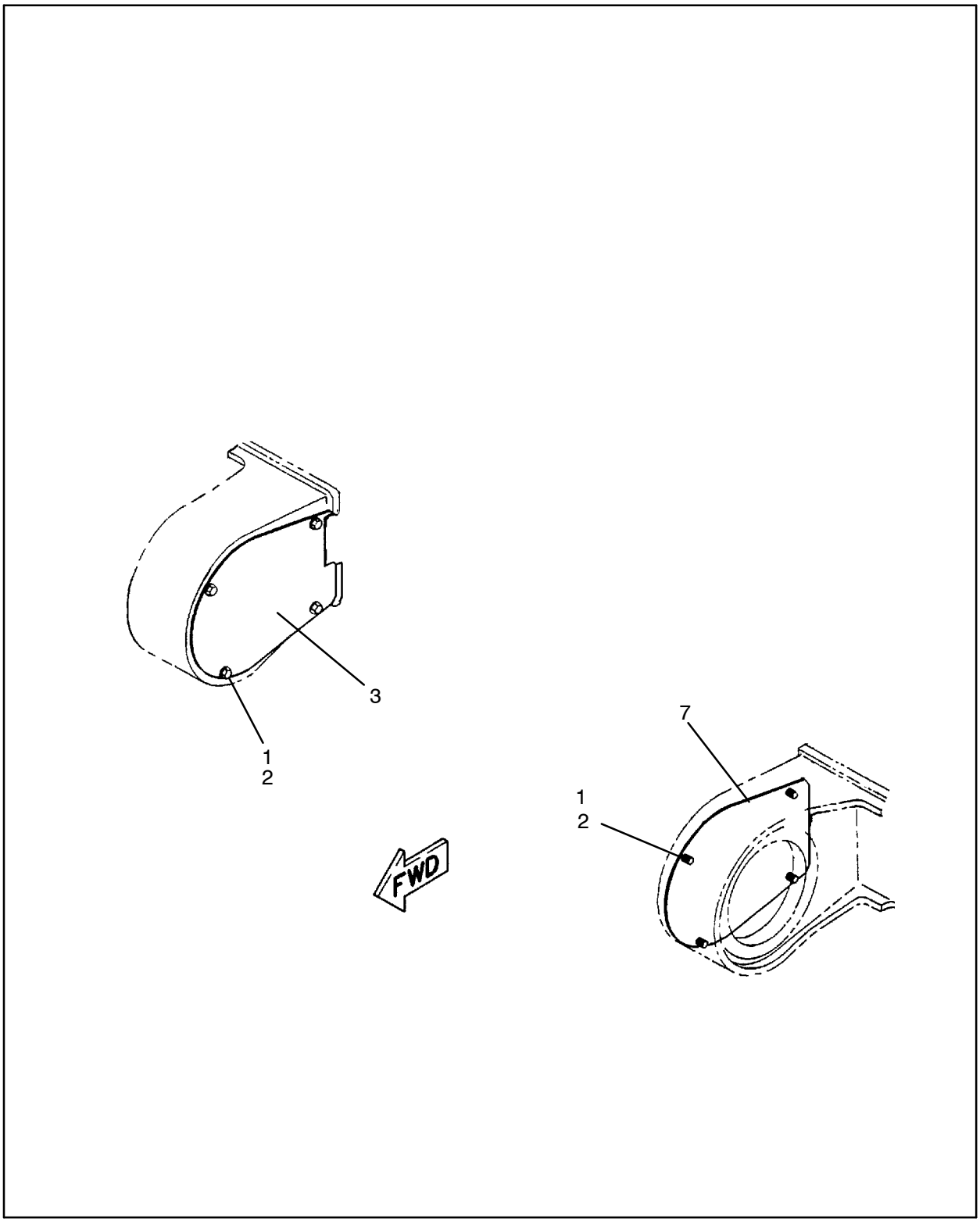

Figure 19 :TRACK MOTOR GUARD GROUP
ILLUSTRATION

57354995 TRACK MOTOR GUARD GROUP

REF.	PART NO.	QTY.	UNIT	DESCRIPTION
001	57357089	16	EA	BOLT
002	57357097	16	EA	WASHER
003	57357642	1	EA	COVER ASSY
007	57357659	1	EA	COVER ASSY

57355000 TRACK GUIDE GUARD GROUP

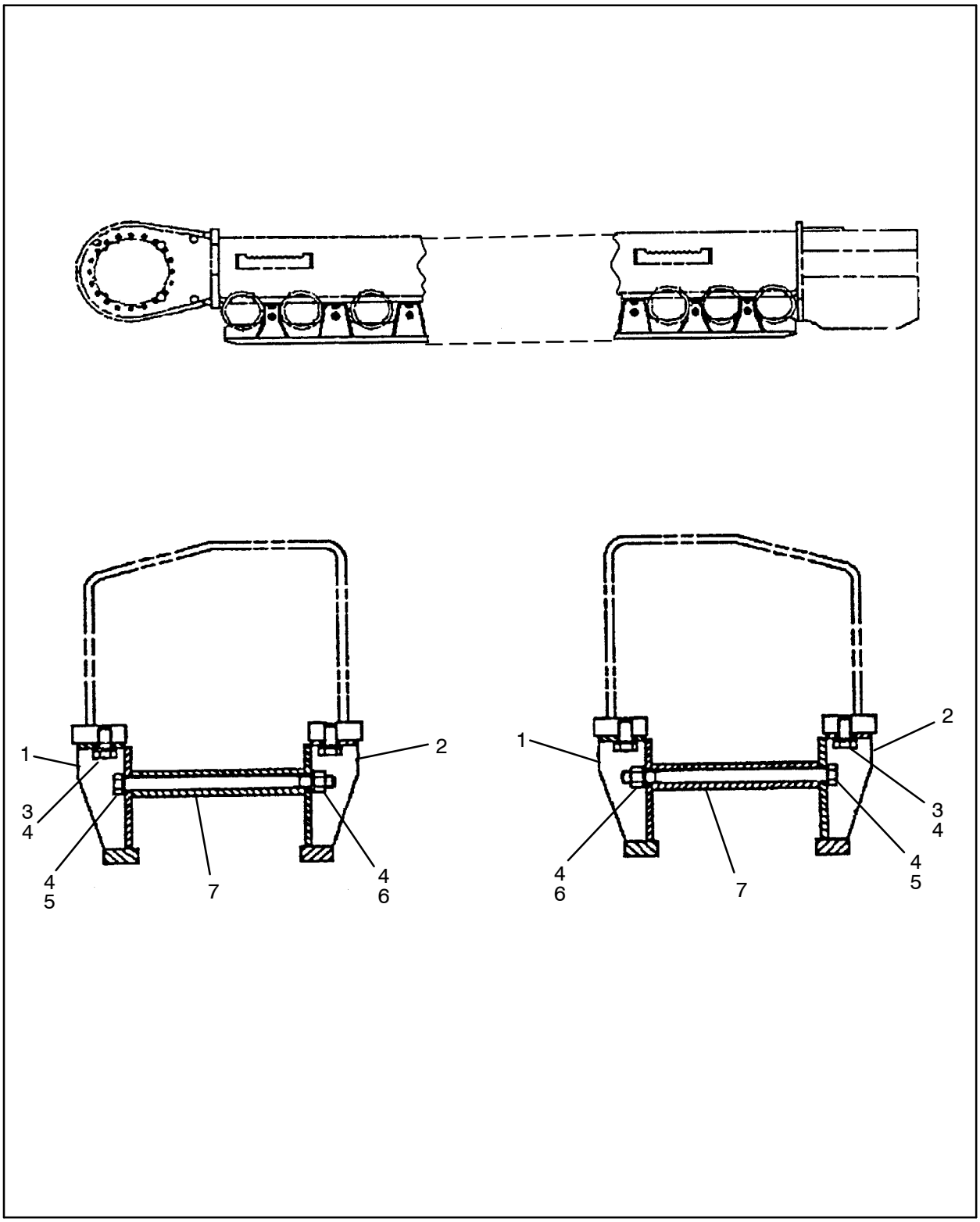

Figure 20 :TRACK GUIDE GUARD GROUP
ILLUSTRATION

57355000 TRACK GUIDE GUARD GROUP

REF.	PART NO.	QTY.	UNIT	DESCRIPTION
001	57357667	2	EA	GUARD ASSY
002	57357675	2	EA	GUARD ASSY
003	57357683	36	EA	BOLT
004	57355075	72	EA	WASHER–PLATED
005	57357709	18	EA	BOLT
006	57357691	18	EA	NUT
007	57357717	18	EA	SPACER

57502395 JACK ASSY, REAR

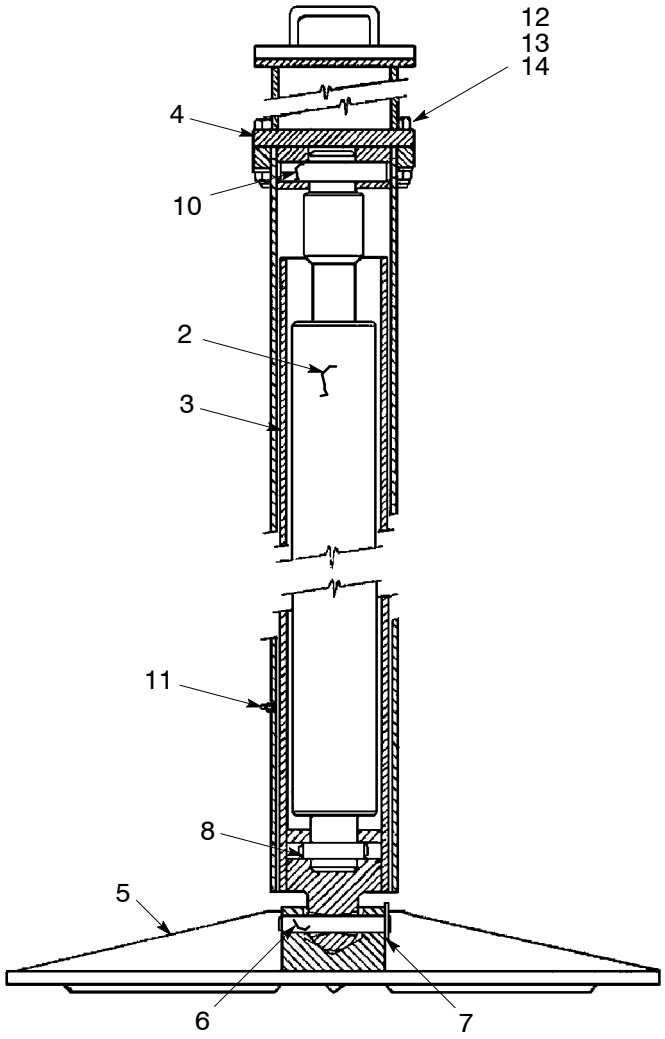

Figure 21 :JACK ASSY, REAR
E57392409 REV 01

WARNING: This manual contains data SPECIFIC to the drilling rig with serial number: 7341.

57502395 JACK ASSY, REAR

REF.	PART NO.	QTY.	UNIT	DESCRIPTION
002	57488868	1	EA	CYLINDER HYDRAULIC
003	50072347	1	EA	SLIDE
004	57392292	1	EA	CAP, CROSSHEAD
005	57196735	1	EA	JACK FOOT PAD
006	95280277	1	EA	PIN, HINGE–1 X 6–3/4
007	95093381	2	EA	PIN, COTTER–3/16 X 1–3/4
008	50067834	1	EA	PIN
010	50171941	1	EA	PIN, ANCHOR
011	95201281	2	EA	FITTING, LUBE
012	95395489	4	EA	SCREW, CAP–1–8 X 3–1/2
013	95228169	4	EA	WASHER, LOCK–1”
014	95077749	4	EA	NUT, HEX–1”–8

57501249 JACK ASSY, FRONT – STD PADS

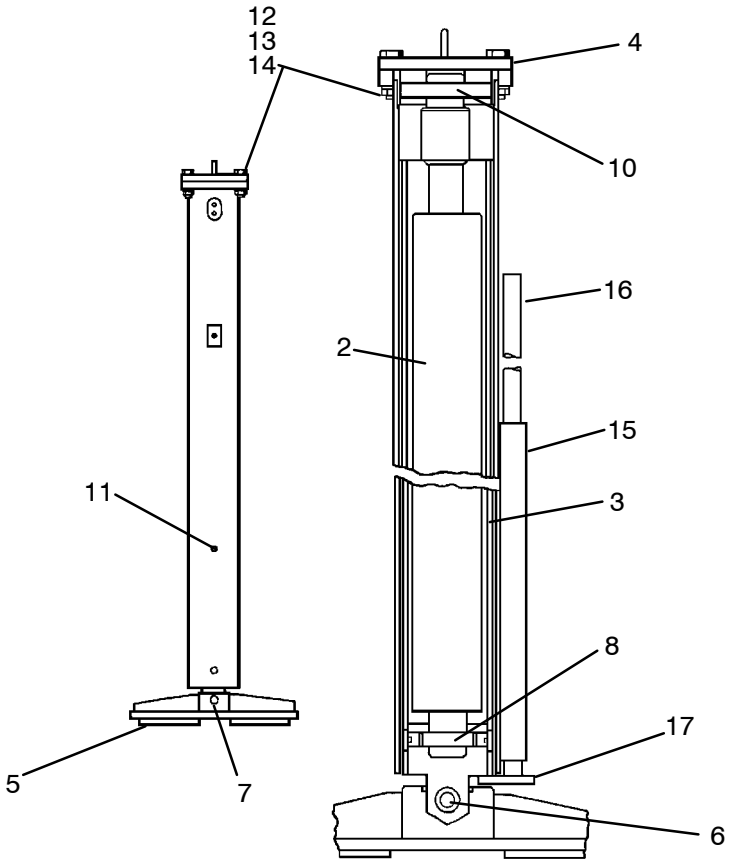

Figure 22 :JACK ASSY, FRONT – STD PADS

E57134991 REV 02

WARNING: This manual contains data SPECIFIC to the drilling rig with serial number: 7341.

57501249 JACK ASSY, FRONT−STD PADS

REF.	PART NO.	QTY.	UNIT	DESCRIPTION
002	57488868	2	EA	CYLINDER HYDRAULIC
003	50072347	2	EA	SLIDE
004	50173467	2	EA	CAP
005	50346436	2	EA	FOOT,JACK
006	95280277	2	EA	PIN, HINGE−1 X 6−3/4
007	95093381	4	EA	PIN, COTTER−3/16 X 1−3/4
008	50067834	2	EA	PIN
010	50171941	2	EA	PIN, ANCHOR
011	95201281	4	EA	FITTING, LUBE
012	95395489	8	EA	SCREW, CAP−1−8 X 3−1/2
013	95228169	8	EA	WASHER, LOCK−1”
014	95077749	8	EA	NUT, HEX−1”−8
015	95341798	2	EA	PIPE
016	57090953	2	EA	BAR,SLIDING
017	50462332	2	EA	PLATE

57475824 CAB INSTALL, SWINGING DOOR

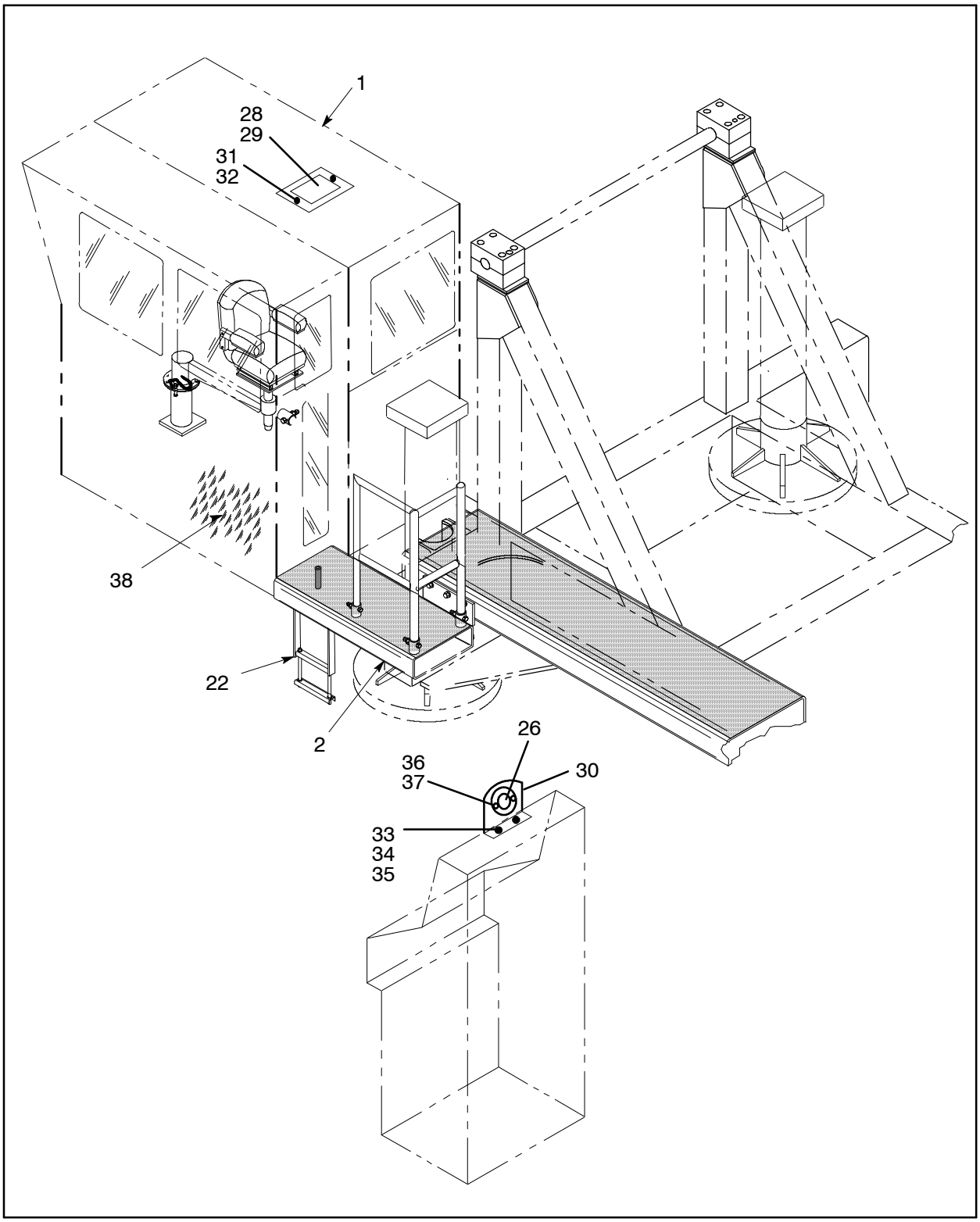

Figure 23 :CAB INSTALL, SWINGING DOOR
D57411613 TAB

WARNING: This manual contains data SPECIFIC to the drilling rig with serial number: 7341.

57475824 CAB INSTALL, SWINGING DOOR

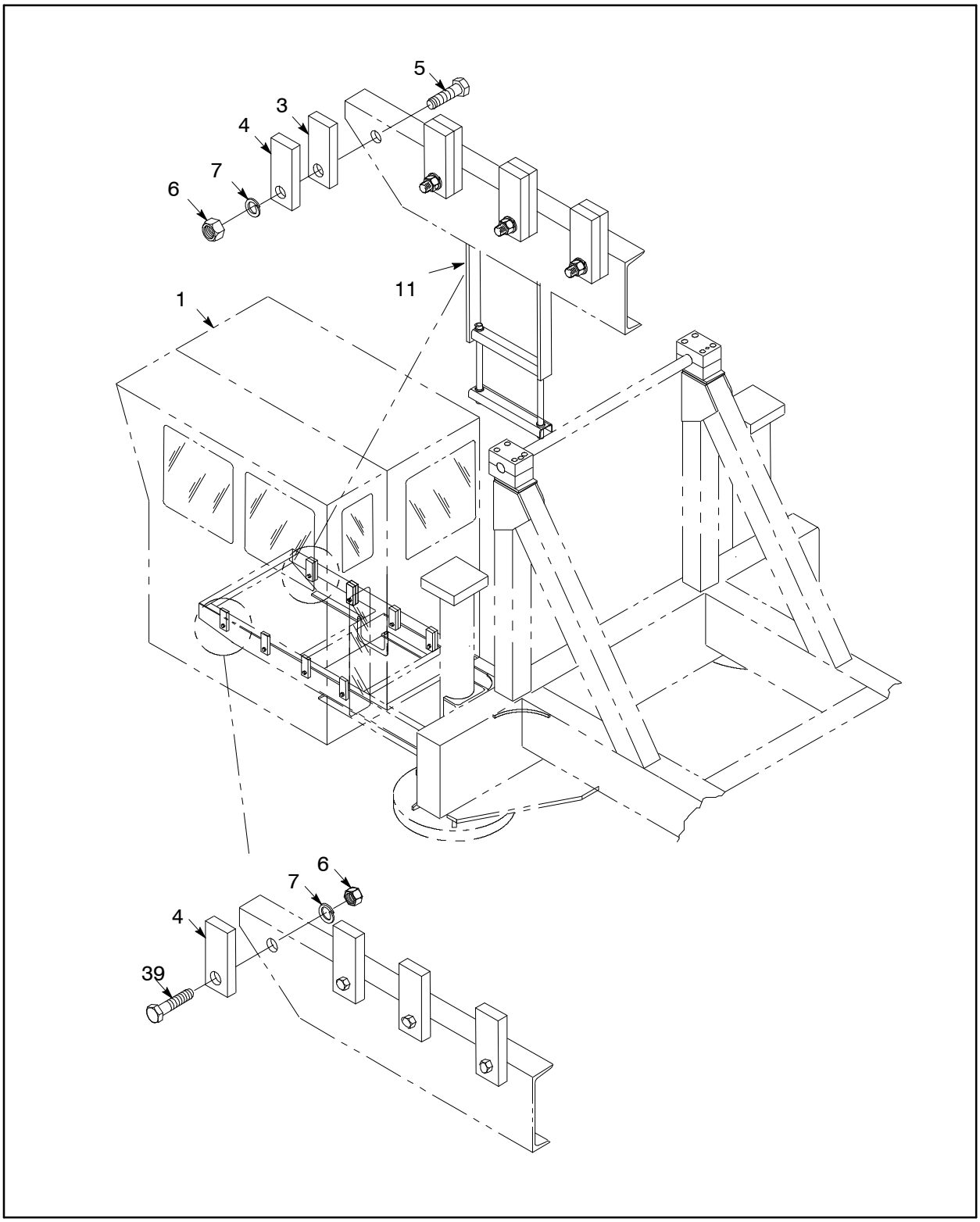

Figure 24 :CAB INSTALL, SWINGING DOOR
D57411613 TAB

57475824 CAB INSTALL, SWINGING DOOR

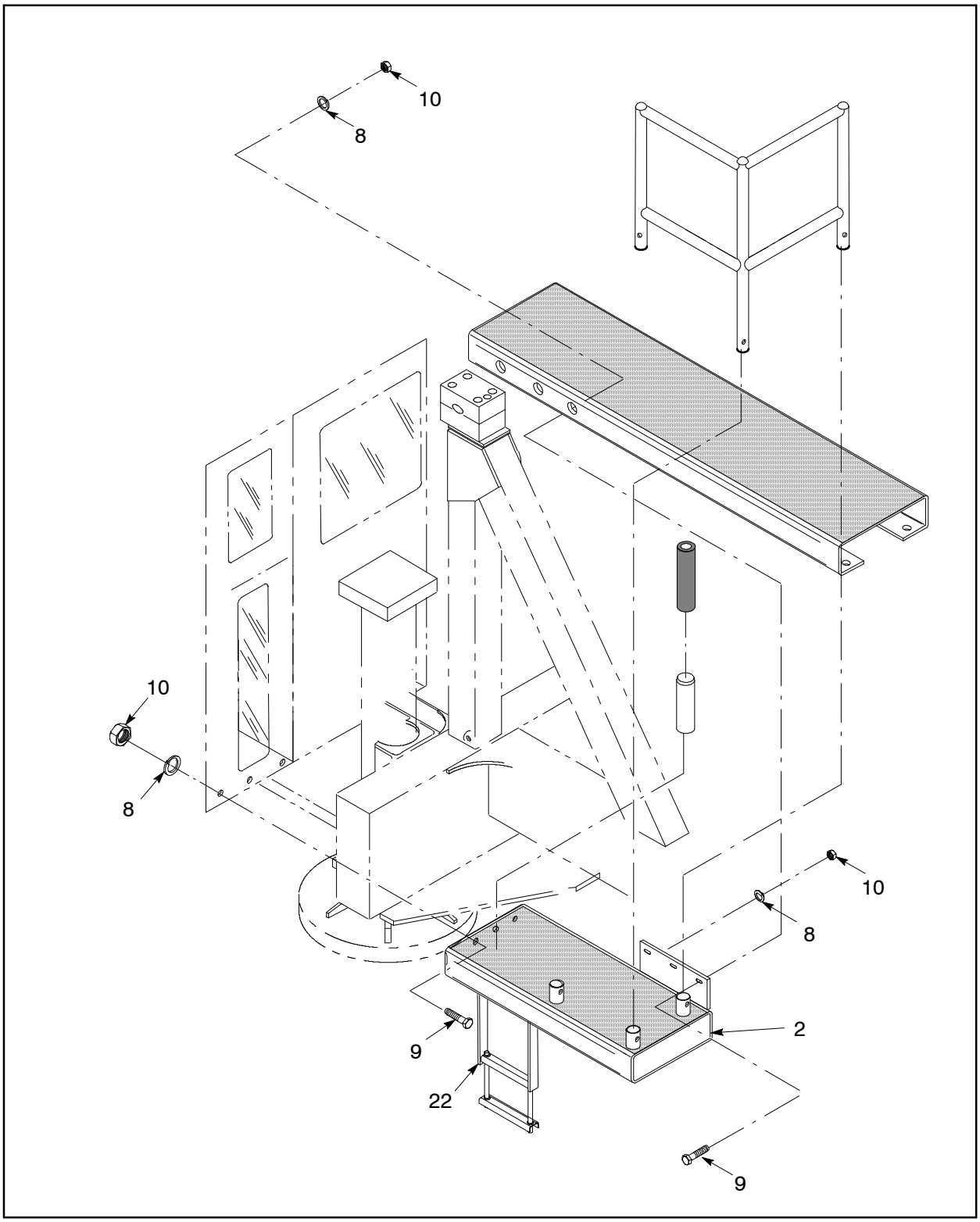

Figure 25 :CAB INSTALL, SWINGING DOOR
D57411613 TAB

WARNING: This manual contains data SPECIFIC to the drilling rig with serial number: 7341.

57475824 CAB INSTALL, SWINGING DOOR

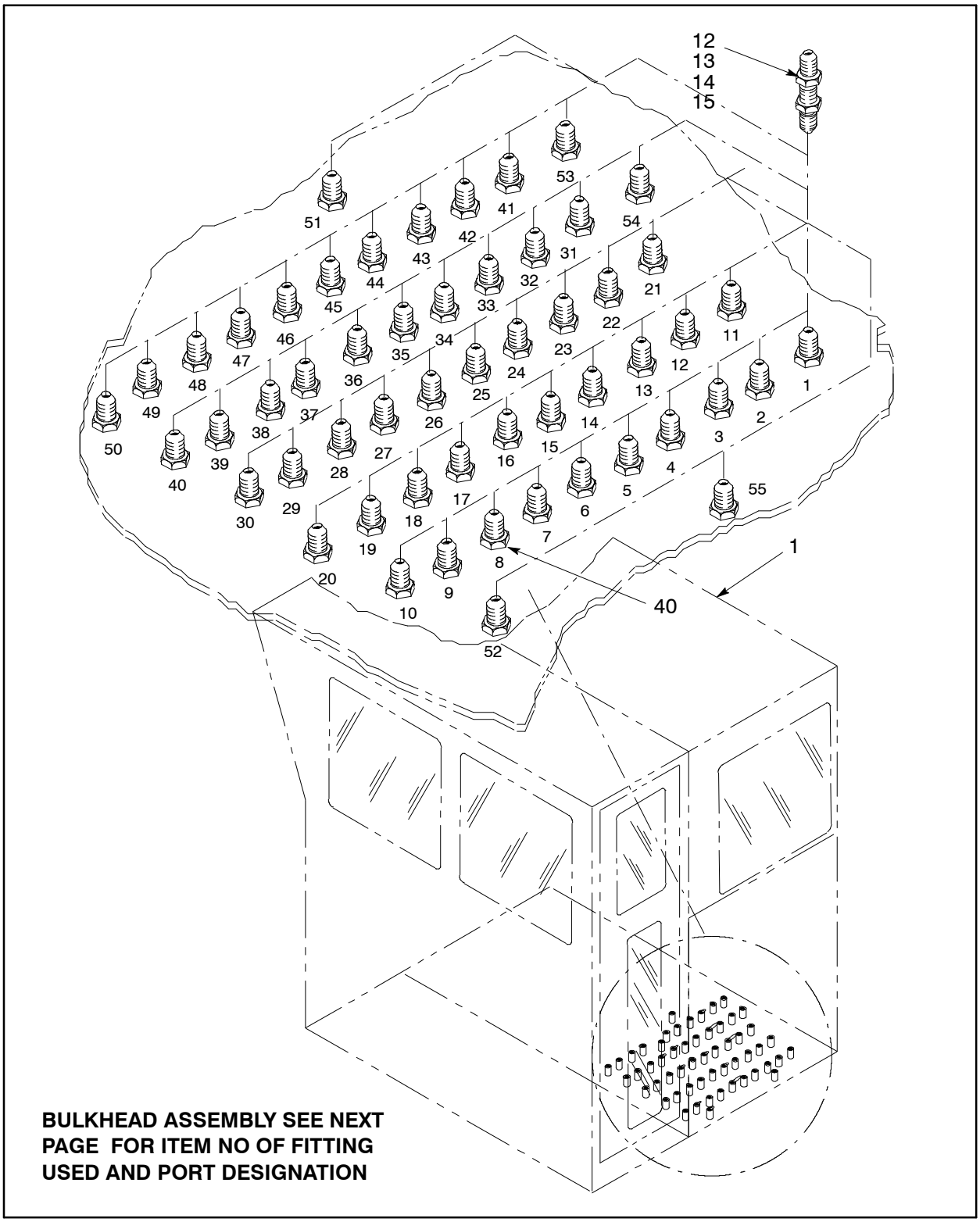

Figure 26 :CAB INSTALL, SWINGING DOOR
D57411613 TAB

57475824 CAB INSTALL, SWINGING DOOR

BULKHEAD PORT DESIGNATION

Hole No.	Item No. Of Fitting Used	Description
1	12	Bit Air Pressure Gauge
2	12	Main Pump Pressure Gauge
3	12	Supercharge Pressure Gauge
4	15	Pressure Line 3 Spool Valve
5		Torque Control (Option)
6		Conduit (Basic Wiring)
7	12	Engine Oil Pressure Gauge
8	40	Diverter Valve Remote Control
9	14	Feed Cylinder Return
10	14	Manifold Remote Control
11	13	Rod Changer Cylinder
12		Dust Curtain Cylinder
13	12	Rod Wrench Cylinder
14	13	Tower Raising & Lowering Cylinder
15	13	Front Jack Cylinder (Rod Changer Side)
16	12	Tower Pinning
17	13	Rear Jack Cylinder
18	15	Hoist Motor
19	13	Front Jack Cylinder (Cab Side)
20	12	Feed Pressure Control Valve Return Line
21	13	Rod Changer Cylinder
22		Dust Curtain Cylinder
23	12	Rod Wrench Cylinder
24	13	Tower Raising & Lowering Cylinder
25	13	Front Jack Cylinder (Rod Changer Side)
26	12	Tower Pinning
27	13	Rear Jack Cylinder
28	15	Hoist Motor
29	13	Front Jack Cylinder (Cab Side)
30	12	Feed Pressure Control Valve Pressure Line
31	14	Index Motor
32	13	Breakout Cylinder
33		
34	15	Feed Pressure Gauge
35	13	Propel Valve Pressure From Fan Pump
36	13	Propel Valve Pressure To Supply Manifold
37	12	Propel Valve Drain
38		Water Injection Metering Line (Option)
39	12	Feed Control Remote Valve
40	15	9 – Spool Valve Return Line
41	14	Index Motor
42	13	Breakout Cylinder
43	15	9 – Spool Valve Pressure
44	13	Feed Valve Drain
45	15	Dust Collector Line
46		Over – Pressure Control (XL 750)
47		Over – Pressure Control (XL 750)
48		Water Injection Metering Line (Option)
49	12	Feed Control Remote valve
50	13	Dust Collector Control Valve Drain
51		Wire Harness Entrance For B. O. Sol. & Options
52	Engine Water Temp. & Comp. Discharge Temp. Capillary Tubes	
53		Drain A/C
54		Dryer/Evaporator
55		Evaporator – Compressor

Figure 27 :CAB INSTALL, SWINGING DOOR
D57411613 TAB

WARNING: This manual contains data SPECIFIC to the drilling rig with serial number: 7341.

57475824 CAB INSTALL, SWINGING DOOR

REF.	PART NO.	QTY.	UNIT	DESCRIPTION	
001	57448094	1	EA	CAB,FAB–SWING DR.AC/C4MTG	*(See figure 28)*
002	57491979	1	EA	PLATFORM,CAB–DML/DM45/50	
	95922894	3	EA	● - NUT, HEX–3/8–16	
	95937413	3	EA	● - WASHER, LOCK–3/8 PLATED	
003	50693308	4	EA	SPACER, CAB	
004	50693290	8	EA	SUPPORT, CAB	
005	95035457	4	EA	SCREW, CAP–3/4–10 X 2–1/4	
006	95077822	8	EA	NUT, HEX–3/4–10	
007	95081808	8	EA	WASHER, LOCK–3/4	
008	95937413	9	EA	WASHER, LOCK–3/8 PLATED	
009	95934592	9	EA	SCREW, CAP–3/8–16 X 2–1/4	
010	95922894	9	EA	NUT, HEX–3/8–16	
011	57214470	1	EA	STEP, CAB	
012	95282422	12	EA	ADAPTER	
013	95364972	17	EA	FITTING, HYD	
014	95364964	5	EA	ADAPTER	
015	95332599	6	EA	ADAPTER	
021	57290041	1	EA	DECAL, A/C HEATER FILTER	(NOT SHOWN)
022	57214587	1	EA	LADDER	
026	50704196	1	EA	LIGHT,PANEL	
028	57097982	1	EA	LIGHT, DOME	
	57097990	1	EA	● - LENS,LEXAN	
029	58175019	1	EA	LAMP, 24V	
030	57455149	1	EA	BRACKET, LIGHT MTG.	
031	95922118	2	EA	SCREW,ROUND HD–10–24X1/2	
032	95238135	2	EA	WASHER, LOCK–#10 PLATED	
033	95928982	2	EA	SCREW, CAP–1/4–20 X 3/4	
034	95934766	2	EA	WASHER, LOCK–1/4 PLATED	
035	95931564	2	EA	NUT, HEX–1/4–20	
036	95922092	2	EA	SCREW,ROUND HD–8–32X3/4	
037	95081840	2	EA	SUB 95922555–LOCKWASHER	
038	57495780	1	EA	FLOORMAT	*
	57484313	1	EA	● - FLOORMAT–5'X5',LAVATWIST	
	57441354	2	EA	● - ADHESIVE	
039	95035440	4	EA	SCREW, CAP–3/4–UNC X 2	
040	52262631	1	EA	FITTING, HYD	

57448094 CAB,FAB – SWING DR.AC/C4MTG

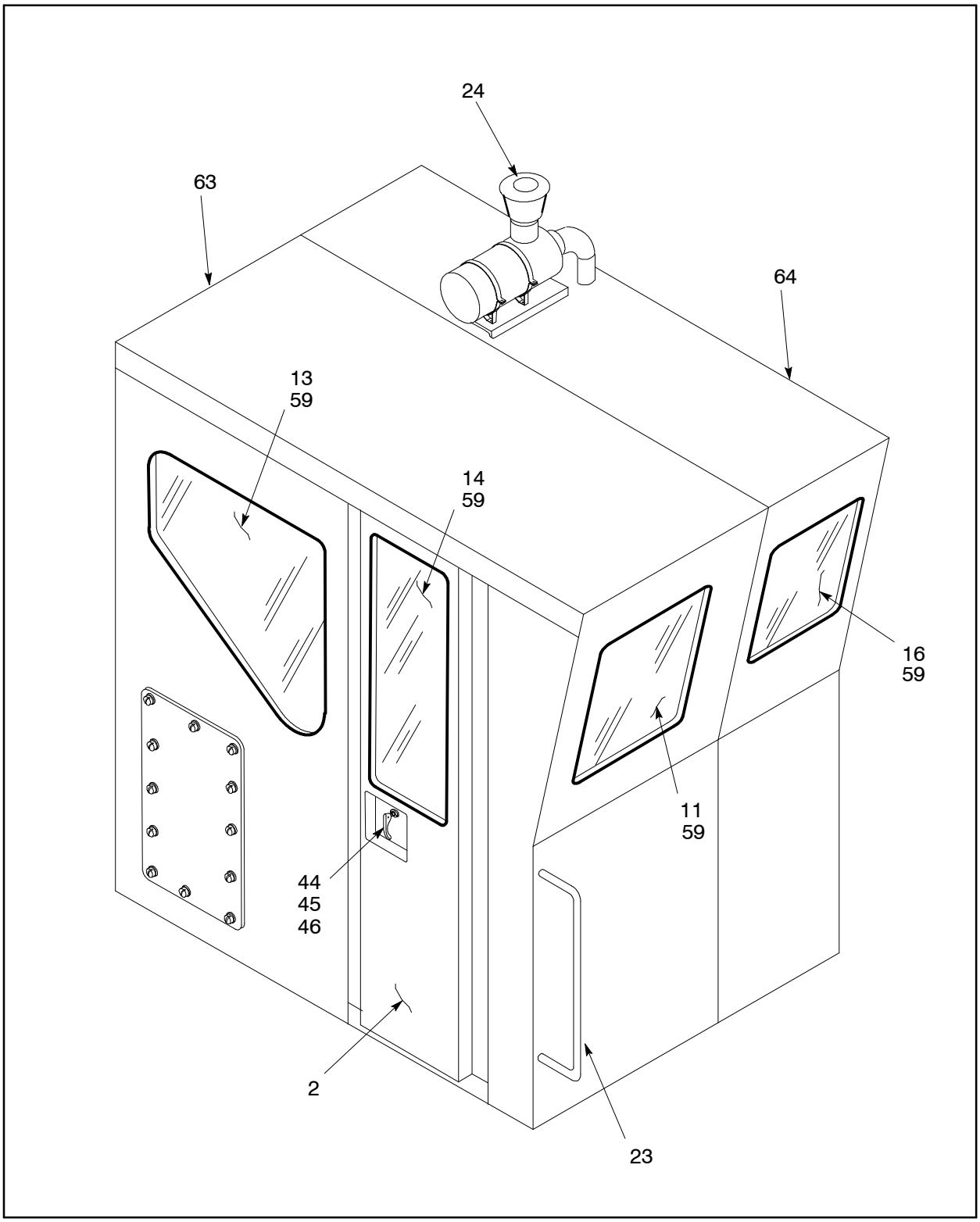

Figure 28 :CAB,FAB – SWING DR.AC/C4MTG
E57448094 REV 04

WARNING: This manual contains data SPECIFIC to the drilling rig with serial number: 7341.

57448094 CAB,FAB – SWING DR.AC/C4MTG

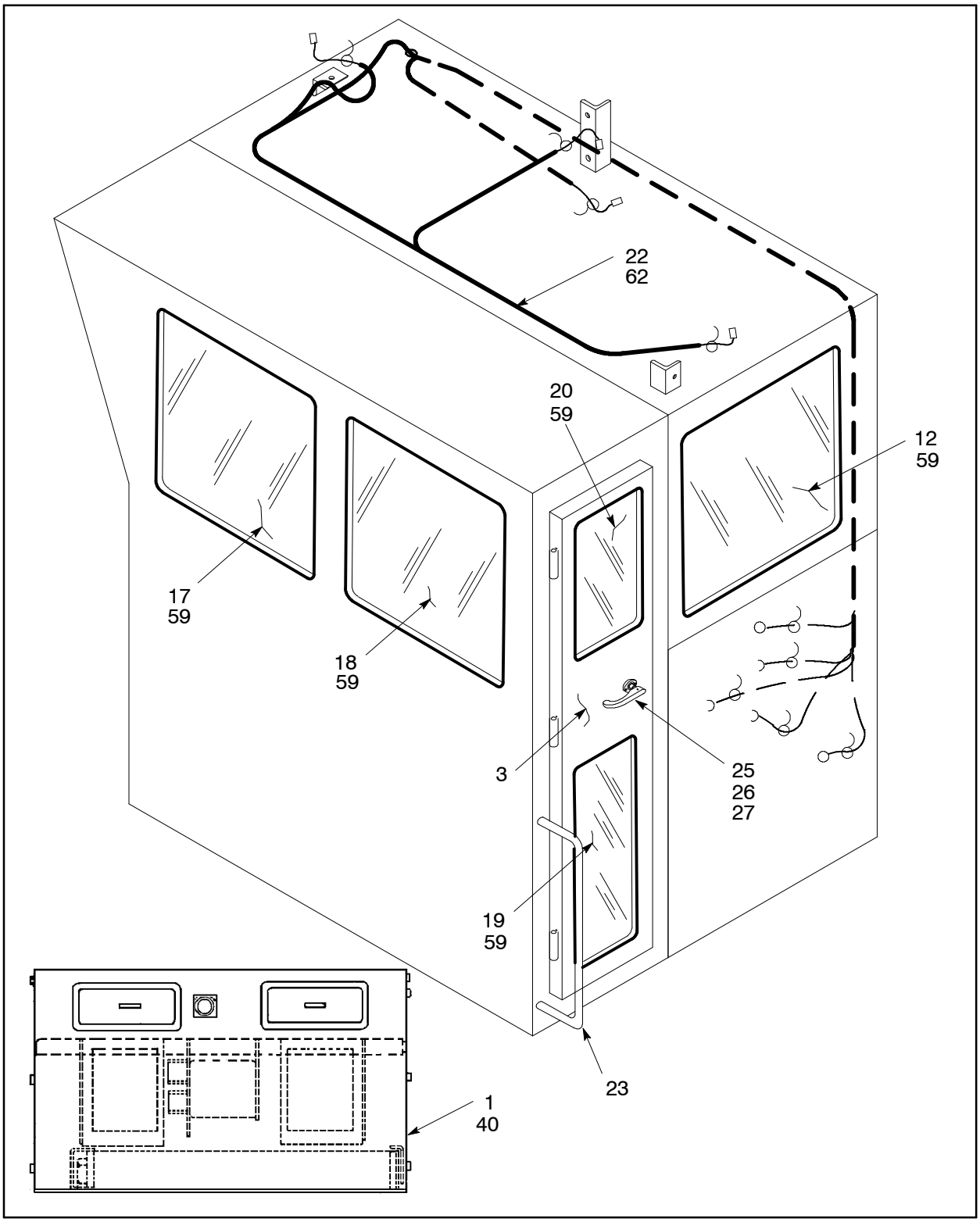

Figure 29 :CAB,FAB – SWING DR.AC/C4MTG
E57448094 REV 04

57448094 CAB,FAB – SWING DR.AC/C4MTG

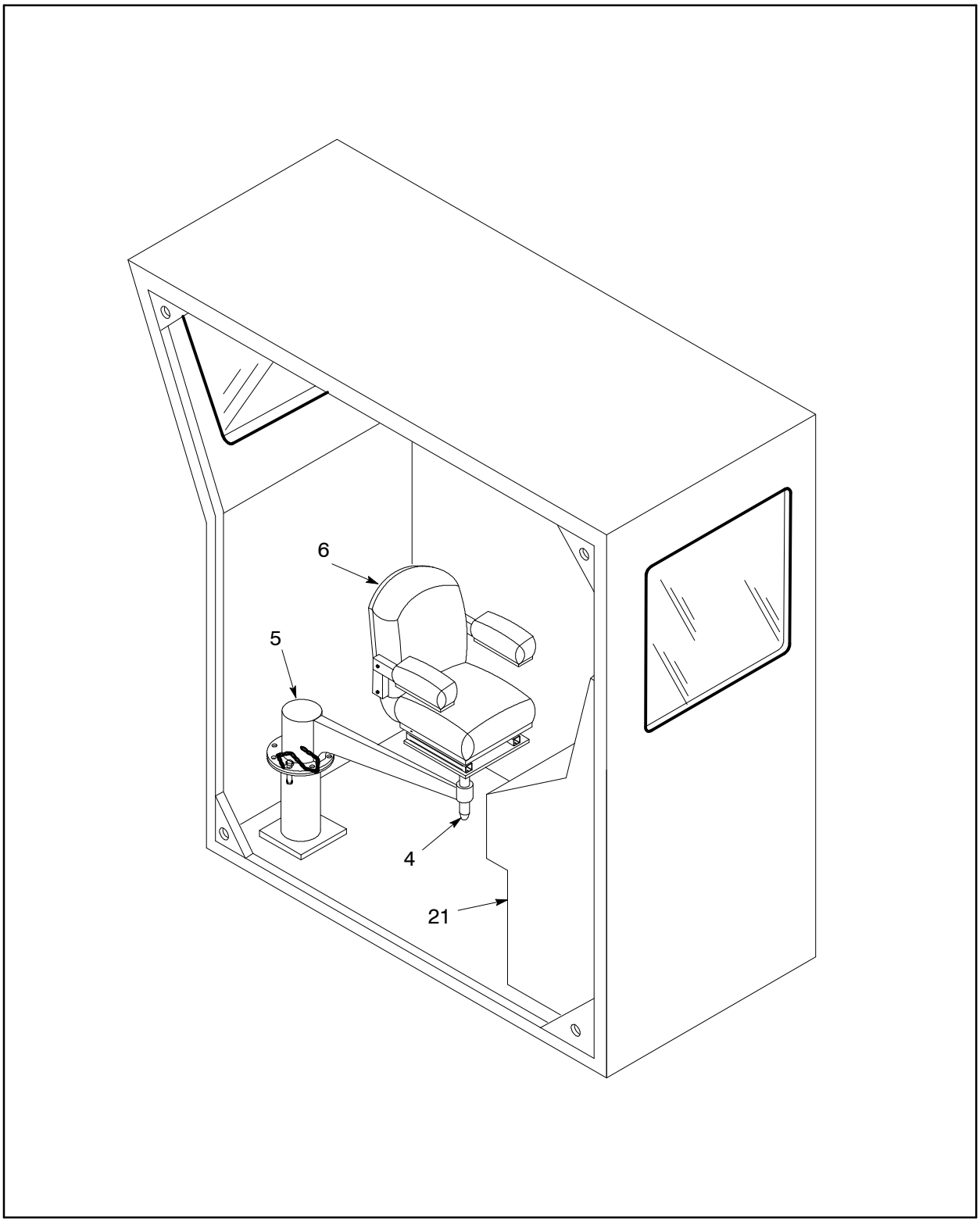

Figure 30 :CAB,FAB – SWING DR.AC/C4MTG
E57448094 REV 04

57448094 CAB,FAB–SWING DR.AC/C4MTG

REF.	PART NO.	QTY.	UNIT	DESCRIPTION	
001	57276909	1	EA	HEATER, ASSY–LESS CABLE	*(See figure 31)*
002	57425506	1	EA	DOOR, INTERNAL SWING	
003	57412306	1	EA	DOOR, CAB–SWING OUT–STEEL	
004	57096950	1	EA	MOUNT,SEAT	
005	57096968	1.00	ST	ARM ASSY, SEAT	
006	51218287	1	EA	SEAT	
	57301822	1	EA	● - CUSHION, SEAT BACK	
	57301814	1	EA	● - CUSHION, BOTTOM	
011	57407769	1	EA	WINDOW, SAFETY GLASS	
012	57407777	1	EA	WINDOW, SAFETY GLASS	
013	57425480	1	EA	WINDOW	
014	57425498	1	EA	WINDOW	
016	57407819	1	EA	WINDOW, SAFETY GLASS	
017	57407827	1	EA	WINDOW, SAFETY GLASS	
018	57407827	1	EA	WINDOW, SAFETY GLASS	
019	57407843	1	EA	WINDOW, SAFETY GLASS	
020	57407850	1	EA	WINDOW, SAFETY GLASS	
021	57202723	1	EA	PANEL, CONTROL	*(See figure 32)*
022	57358830	26.00	IN	CONDUIT, 3/8” NYLON	
023	57214983	2	EA	HANDLE, ASSIST	
024	57408783	1	EA	PRECLEANER/FILTER KIT	*(See figure 33)*
025	57004152	1	EA	LATCH,DOOR	
026	57240921	1	EA	STRIKER, DOOR LATCH	
027	57425522	1	EA	RELEASE,INSIDE–SWING DOOR	
040	57407876	1	EA	FILTER, AIR RECIRCULATION	
044	57096984	1	EA	LATCH	
045	57425548	1	EA	LOCKING HANDLE	
046	57425555	1	EA	HANDLE, INSIDE	
047	57245631	1	EA	KIT,CAB HEATER, RETROFIT	(NOT SHOWN)
	57417156	1	EA	● - VALVE, BALL	
059	52233715	70.00	FT	WEATHERSTRIP	
062	57358830	305.00	IN	CONDUIT, 3/8” NYLON	
063	57511867	1	EA	CAB–CONSOLE SIDE	
064	57511875	1	EA	CAB–EXT. SIDE	

57276909 HEATER, ASSEMBLY–LESS CABLE

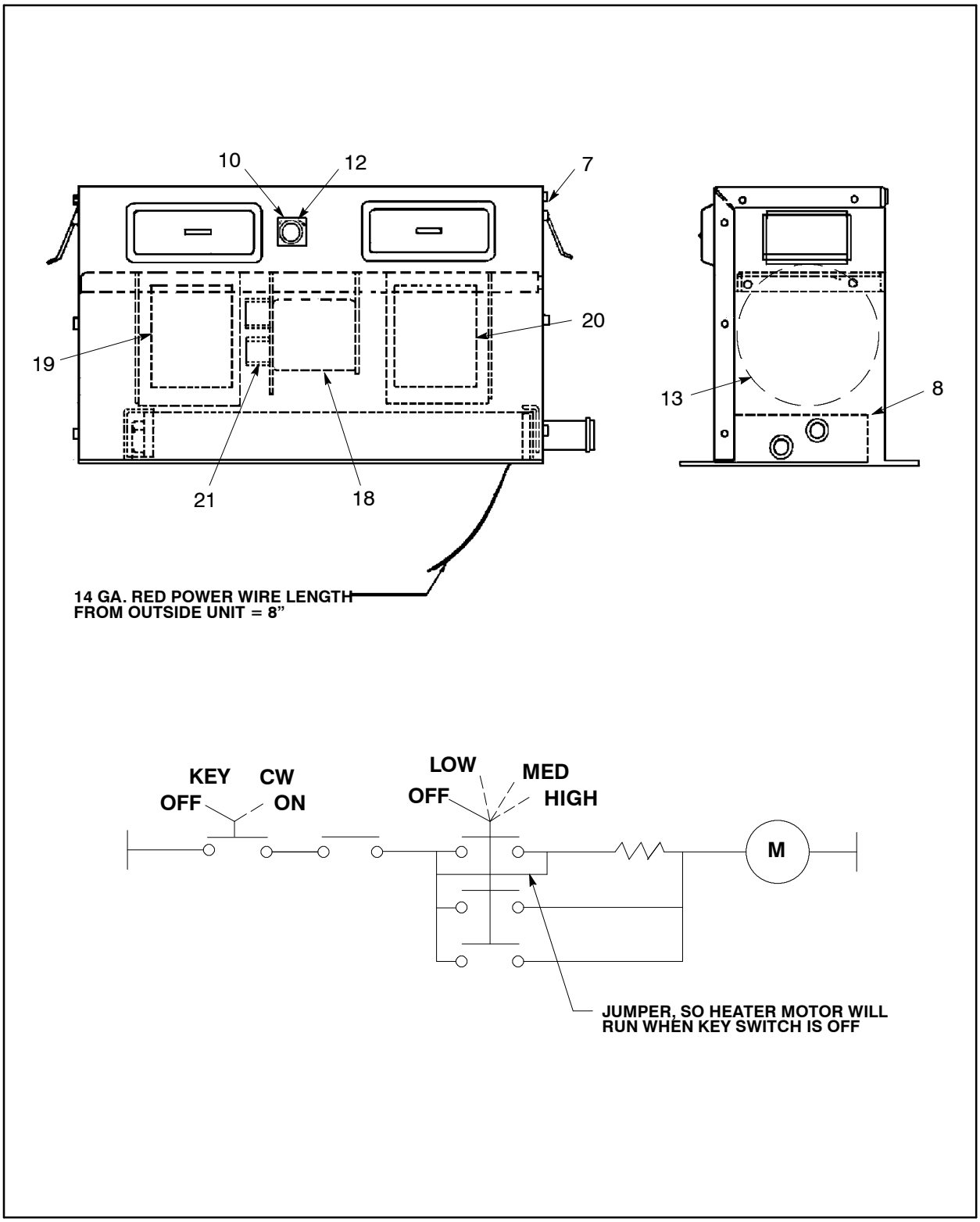

Figure 31 :HEATER, ASSEMBLY–LESS CABLE
E57276909 REV01

57276909 HEATER, ASSEMBLY–LESS CABLE

REF.	PART NO.	QTY.	UNIT	DESCRIPTION
007	57245631	1	EA	KIT,CAB HEATER, RETROFIT
	57417156	1	EA	● - VALVE, BALL
008	52218054	1	EA	CORE
010	58235268	1	EA	KNOB,CONTROL
012	52218146	1	EA	SWITCH
013	57096836	1	EA	BLOWER ASSY.
018	58234501	1	EA	MOTOR, 24V
019	57096844	1	EA	WHEEL,C.W.
020	57096844	1	EA	WHEEL,C.W.
021	58234519	1	EA	RESISTOR,24V

57202723 PANEL, CONTROL

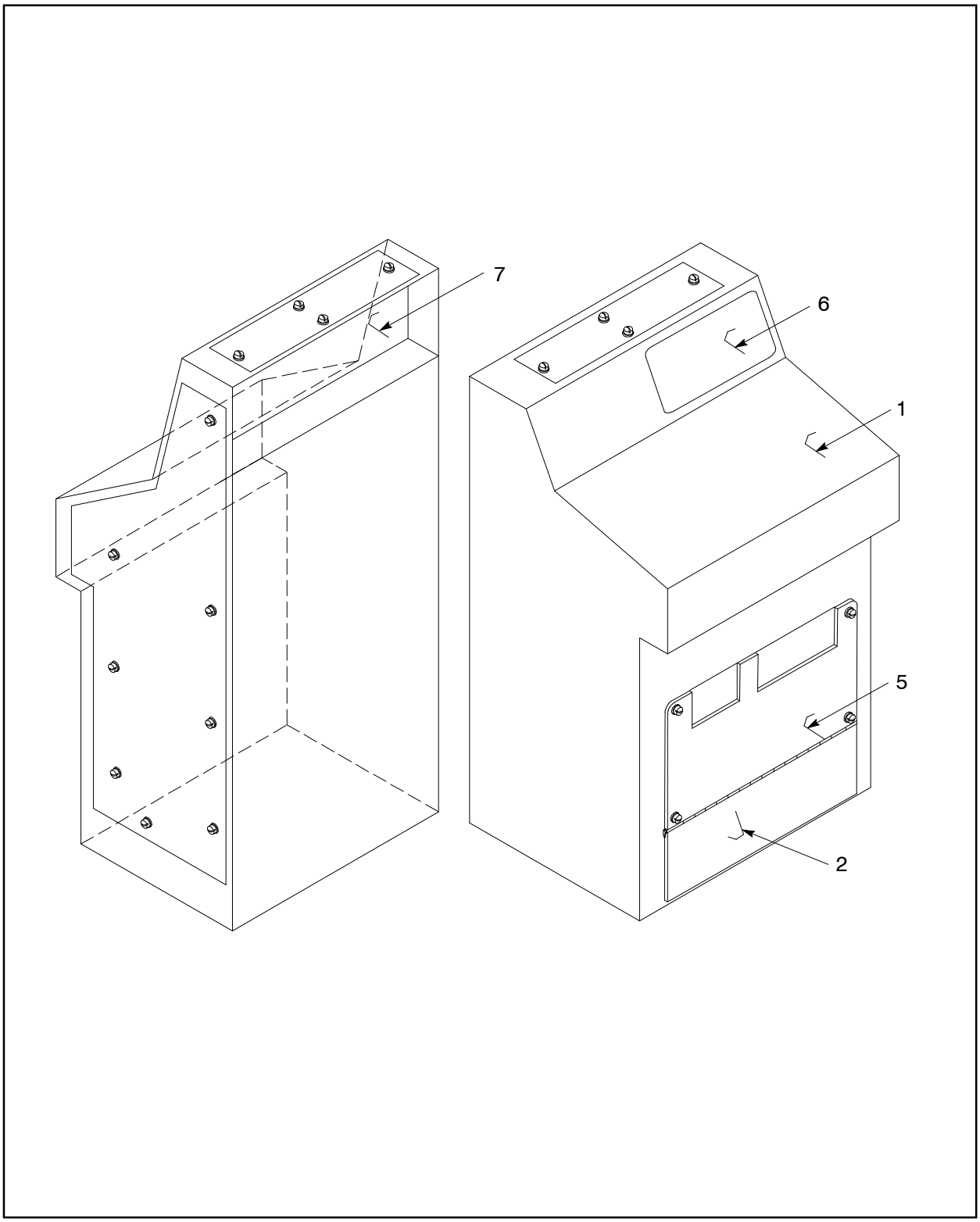

Figure 32 :PANEL, CONTROL
E57202723 REV 05

57202723 PANEL, CONTROL

REF.	PART NO.	QTY.	UNIT	DESCRIPTION
001	57448110	1	EA	PLATE,TOP–CONTROL PANEL
002	57202756	1	EA	PLATE FRONT
005	57202731	1	EA	PLATE, VALVE MOUNT
006	57490567	1	EA	PANEL, ELECTRICAL UPPER
007	57078032	1	EA	PANEL, MOUNTING

57408783 PRECLEANER/FILTER KIT

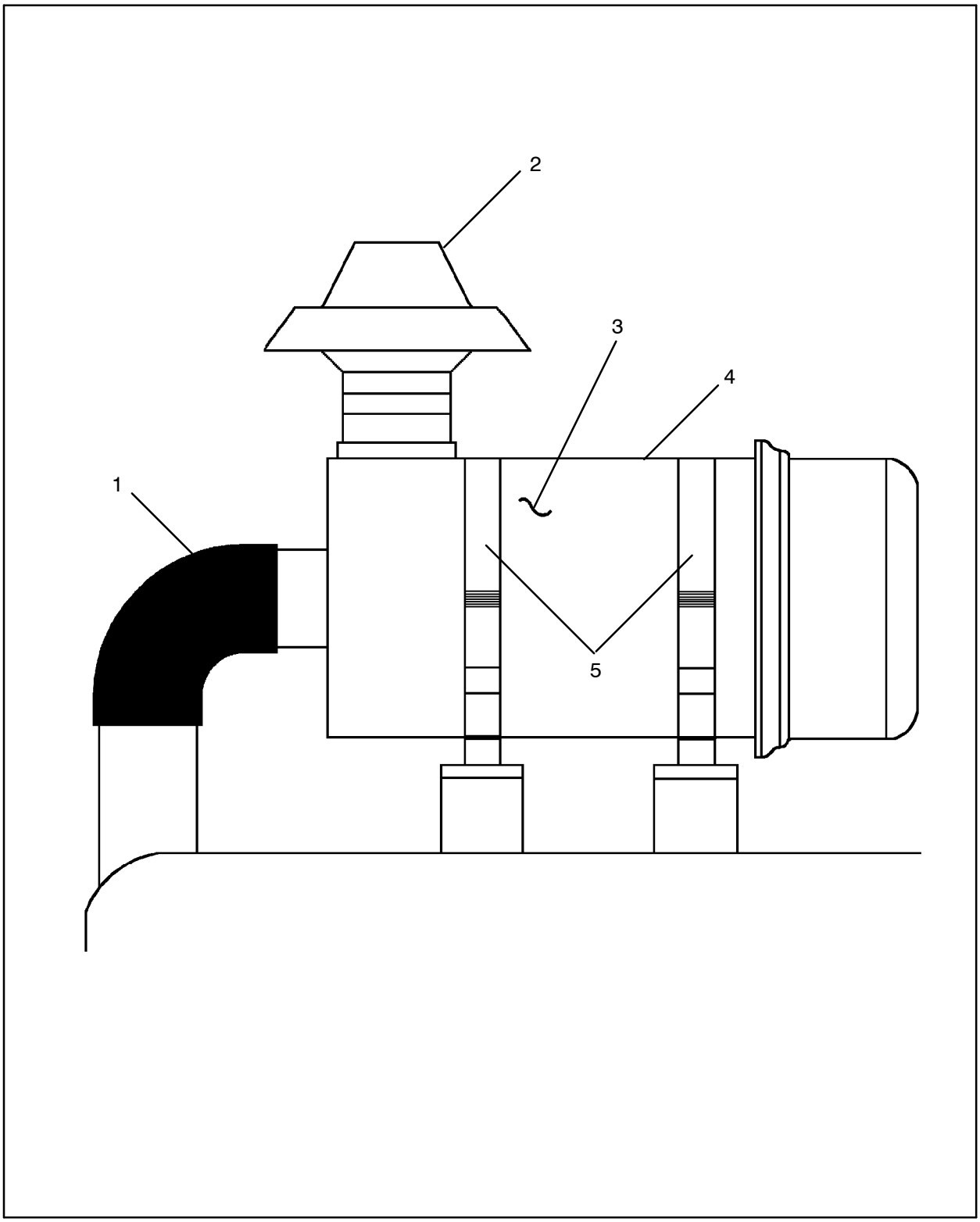

Figure 33 :PRECLEANER/FILTER KIT
B57408783 REV 00

57408783 PRECLEANER/FILTER KIT

REF.	PART NO.	QTY.	UNIT	DESCRIPTION
001	57331886	1	EA	ELBOW, RUBBER
002	57371759	1	EA	PRE–CLEANER
	57371833	1	EA	● - COVER, PRE–CLEANER
	57371841	1	EA	● - BOWL
	57371858	1	EA	● - SLEEVE, PRE–CLEANER
003	57301780	1	EA	ELEMENT, FILTER
004	59302752	1	EA	AIR CLEANER
005	57331894	2	EA	BAND, MOUNTING

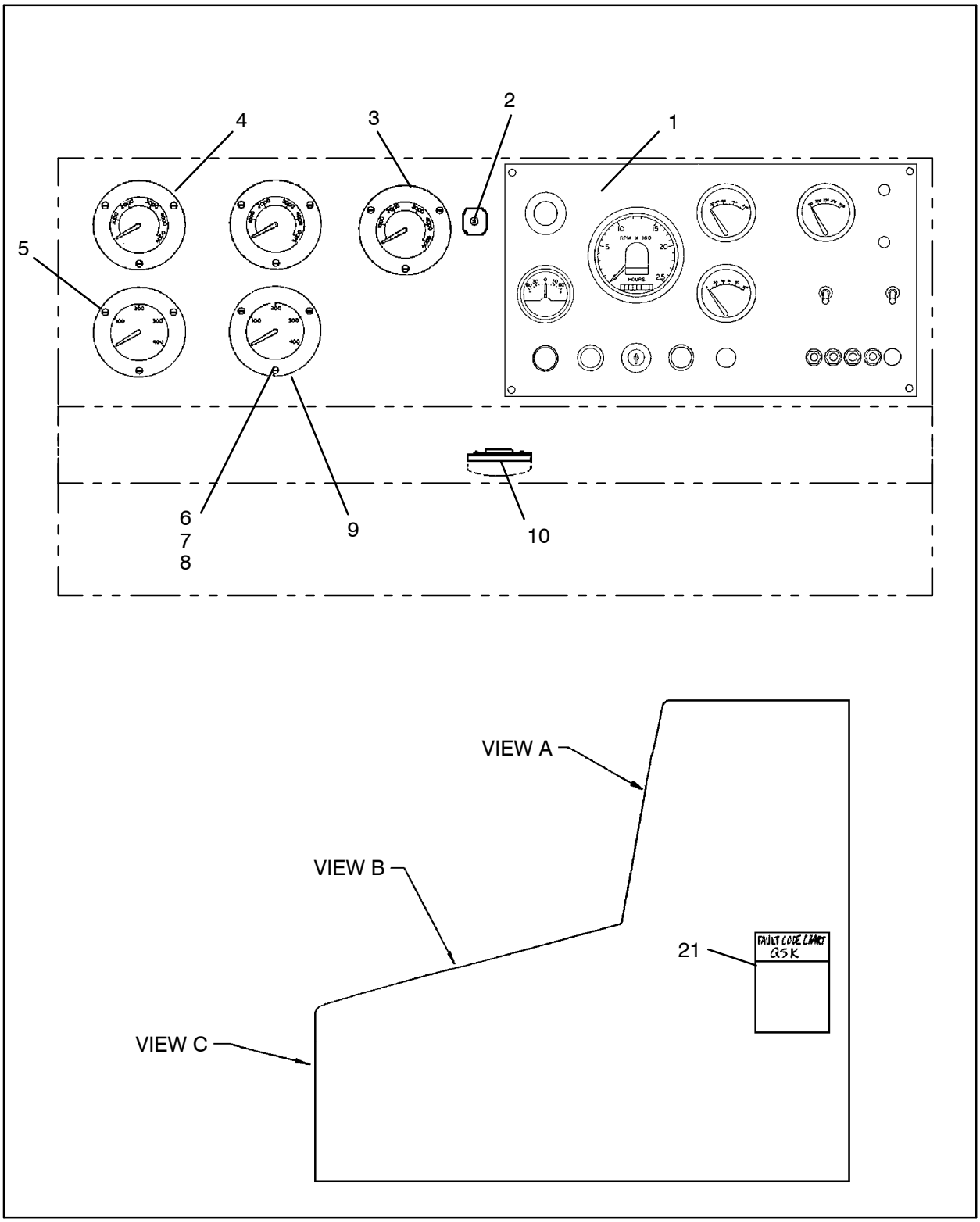

Figure 34 :GAGES/CONTROLS – HP/QSK/DML

D57483703 REV 02

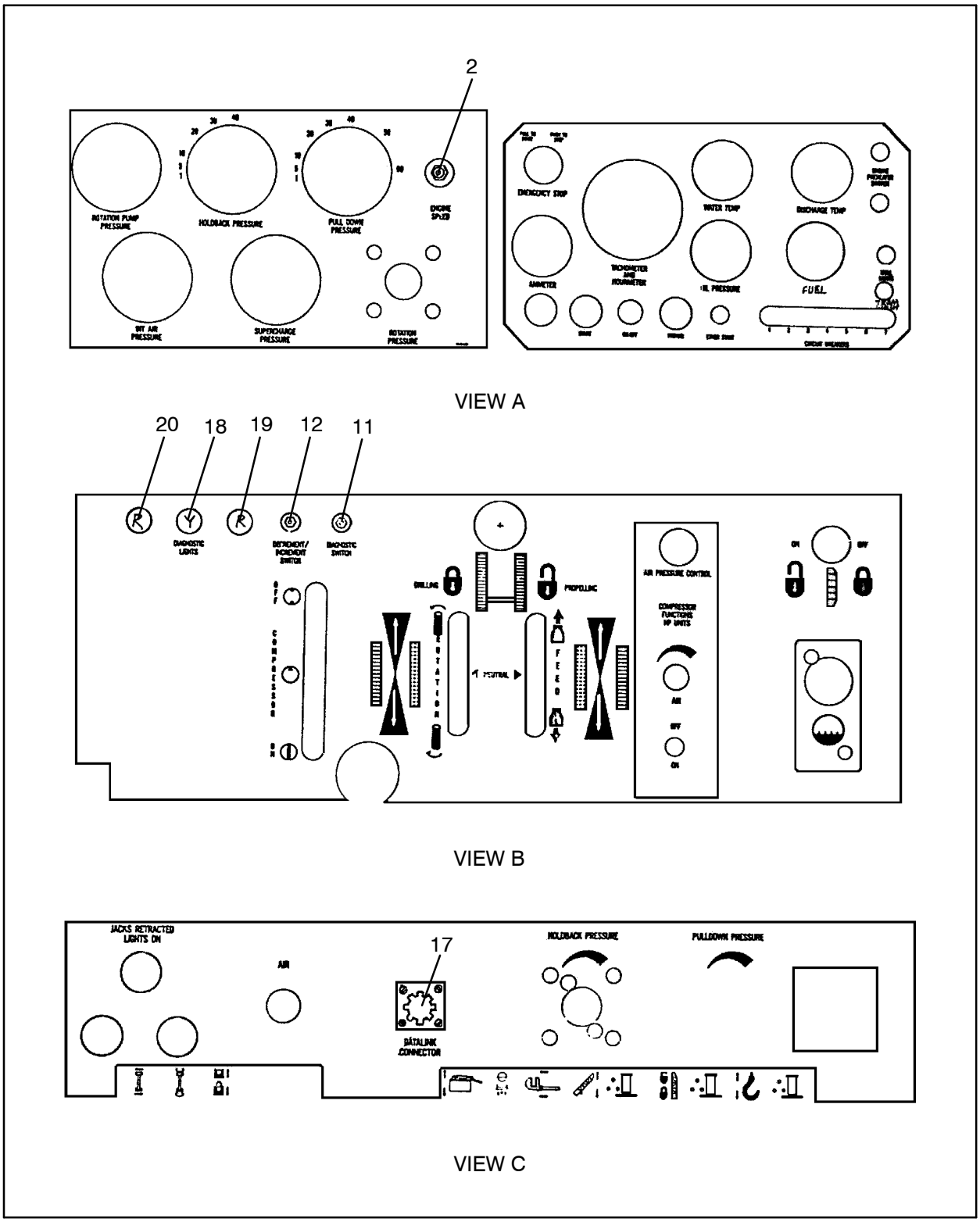

Figure 35 :GAGES/CONTROLS – HP/QSK/DML
D57483703 REV 02

57483703 GAGES/CONTROLS–HP/QSK/DML

REF.	PART NO.	QTY.	UNIT	DESCRIPTION	
001	57533929	1	AS	PANEL,ELEC ASM–CELECT/HPI	*(See figure 36)*
002	57243180	1	EA	SWITCH, DPDT/ON–OFF–ON $	
003	57092686	1	AS	GAUGE ASSY *	
	56930688	1	EA	● - GAUGE, PRESSURE–0–5000PSI	
	95279196	1	EA	● - FITTING,HYD	
	56954068	1	EA	● - HOSE ASSY	
004	57092694	1	AS	GAUGE ASSY *	
	56930688	1	EA	● - GAUGE, PRESSURE–0–5000PSI	
	95293353	1	EA	● - ADAPTER	
	56964216	1	EA	● - HOSE ASSY	
005	57429920	1	AS	GAUGE ASSY, AIR–400 PSI *	
	56951395	1	EA	● - GAUGE,AIR PRESS–400 PSI	
	95293353	1	EA	● - ADAPTER	
	56965759	1	EA	● - HOSE ASSY	
006	95933248	12	EA	SCREW,ROUND HD–6–32X3/4	
007	95922548	12	EA	LOCKWASHER–NO. 6	
008	95076717	12	EA	NUT, MACHINE–HEX, #6–32	
009	57092702	1	AS	GAUGE ASSY *	
	56951395	1	EA	● - GAUGE,AIR PRESS–400 PSI	
	95293353	1	EA	● - ADAPTER	
	52226453	1	EA	● - HOSE ASSY	
010	57100075	1	EA	LEVEL *	*(See figure 38)*
011	57179608	1	EA	SWITCH, SPST/ON–OFF	
012	57216913	1	EA	SWITCH, TOGGLE	
017	57482523	1	EA	CONNECTOR,DATALINKDUETSCH	
018	57438889	1	EA	INDICATOR,PANELMTG.YELLOW	
019	57438863	1	EA	INDICATOR,PANEL MTG. RED	
020	57438863	1	EA	INDICATOR,PANEL MTG. RED	
021	57502155	1	EA	CHART, FAULT CODE – QSK	

This page is blank.

57533929 PANEL, ELECTRIC ASSEMBLY – CELECT/HPI

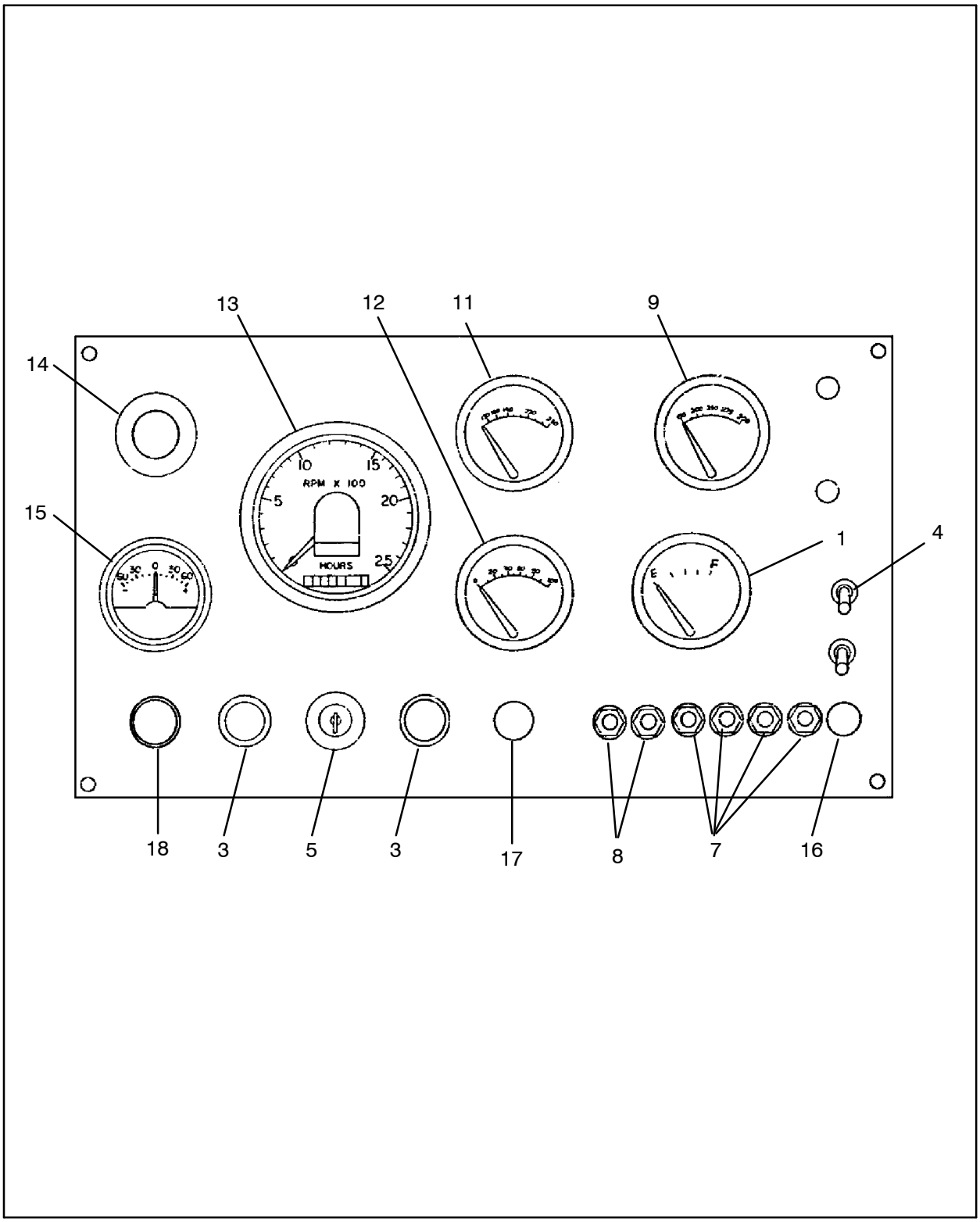

Figure 36 :PANEL, ELECTRIC ASSEMBLY – CELECT/HPI
D57533929 REV 00

WARNING: This manual contains data SPECIFIC to the drilling rig with serial number: 7341.

57533929 PANEL, ELECTRIC ASSEMBLY–CELECT/HPI

REF.	PART NO.	QTY.	UNIT	DESCRIPTION	
001	57534281	1	EA	GAUGE, FUEL–24VDC	
	57534315	0	EA	● - PANEL, ONE GAUGE	
	57443954	1	EA	● KIT, LIGHT GAUGE – 24VDC	
003	52185832	2	EA	SWITCH, PUSH BUTTON	
004	56762198	2	EA	SWITCH, TOGGLE–SPST	
005	56993678	1	EA	SWITCH, KEY	
007	57084055	4	EA	BREAKER, CIRCUIT–15 AMP	
008	57117848	2	EA	BREAKER, CIRCUIT–5 AMP	
009	57093155	1	EA	GAUGE,TEMP	
011	57018533	1	EA	SWITCHGAGE	
012	57533945	1	AS	GAUGE ASSY–ENGINE OIL,QSK	*(See figure 37)*
013	56993694	1	EA	TACHOMETER	
014	57358855	1	EA	PUSHBUTTON, 2–POSITION	
	57364010	1	EA	● - LED,24V AC/DC RED	
015	57515314	1	EA	GAUGE, AMMETER	
016	57091274	2	EA	BREAKER, CIRCUIT–20 AMP	
017	58046434	1	EA	PLUG,HOLE	
018	58046434	1	EA	PLUG,HOLE	

57533945 GAUGE ASSEMBLY – ENGINE OIL, QSK

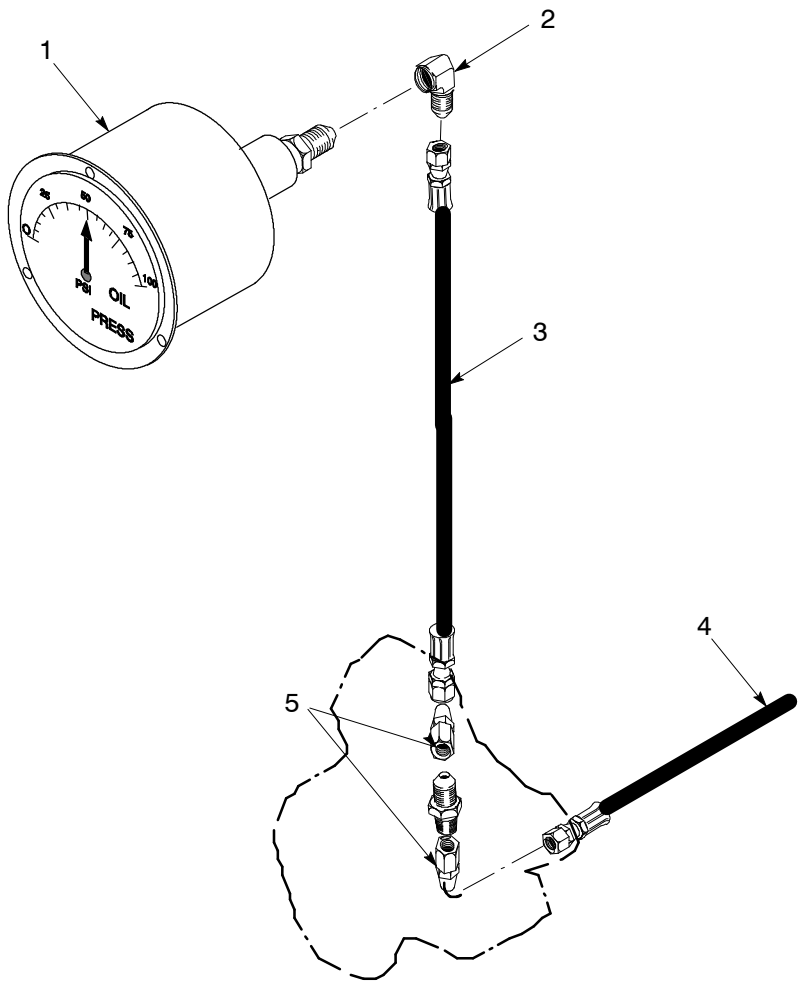

Figure 37 :GAUGE ASSEMBLY – ENGINE OIL, QSK
B57533945 REV 00

WARNING: This manual contains data SPECIFIC to the drilling rig with serial number: 7341.

57533945 GAUGE ASSEMBLY – ENGINE OIL, QSK

REF.	PART NO.	QTY.	UNIT	DESCRIPTION
001	56993702	1	EA	SWITCHGAGE, OIL PRESSURE
002	52247681	1	EA	FITTING, 45 DEG
003	58146622	1	EA	HOSE ASSY
004	56964349	1	EA	HOSE ASSY
005	56999246	2	EA	FITTING, HYD

57100075 LEVEL

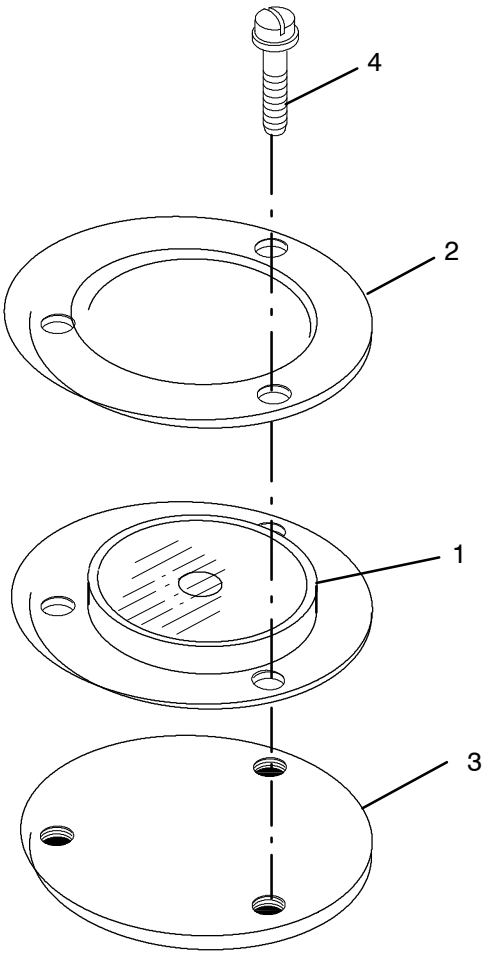

Figure 38 :LEVEL
Y50258565 TAB

57100075 LEVEL

REF.	PART NO.	QTY.	UNIT	DESCRIPTION
001	50046861	1	EA	LEVEL
002	50046846	1	EA	RING
003	50046853	1	EA	RING,MTG
004	95078846	3	EA	SCREW

57421794 HEATER INSTALL, CAB

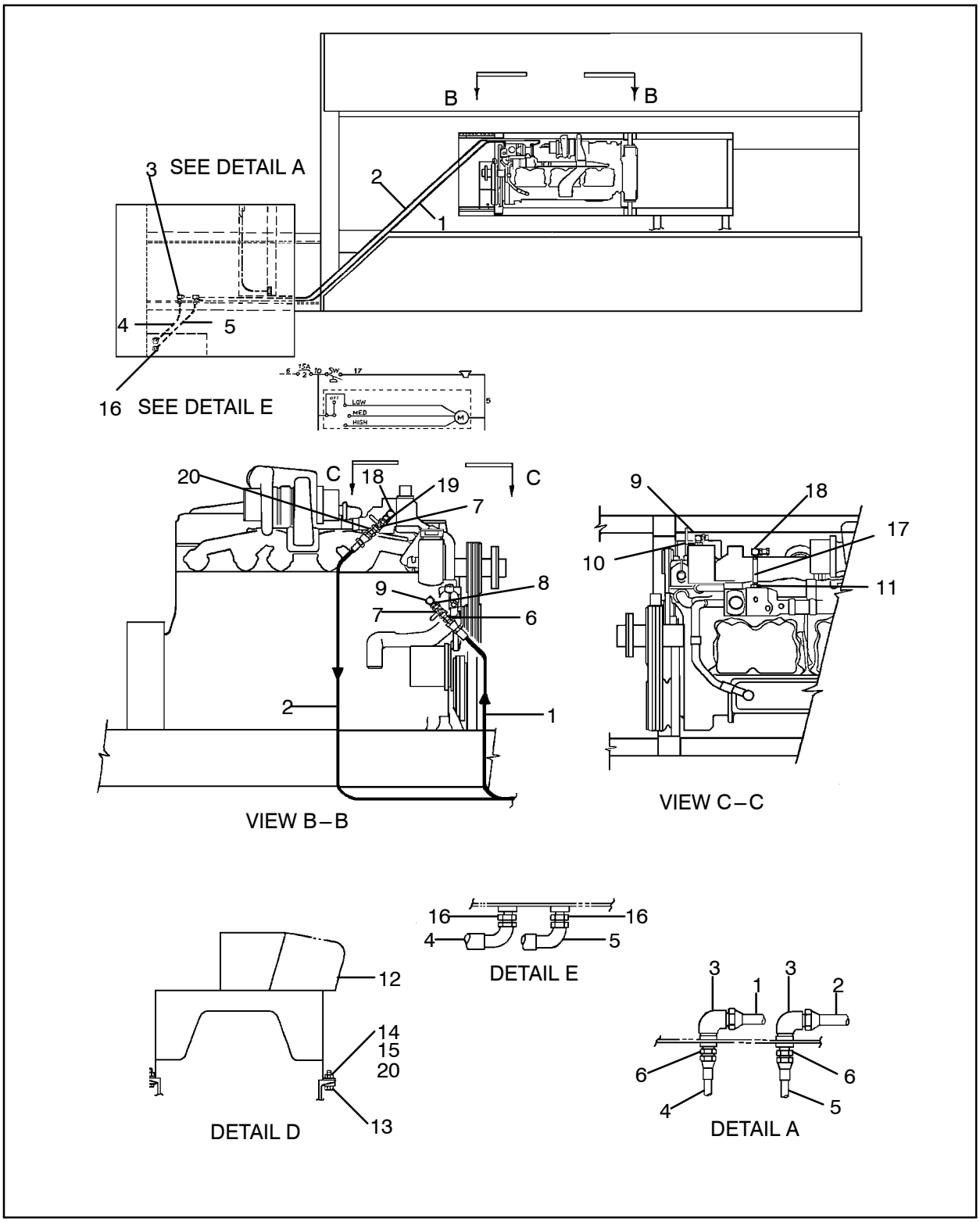

Figure 39 :HEATER INSTALL, CAB
D57421794 REV 01

WARNING: This manual contains data SPECIFIC to the drilling rig with serial number: 7341.

57421794 HEATER INSTALL, CAB

REF.	PART NO.	QTY.	UNIT	DESCRIPTION
001	57100935	1	AS	HOSE ASSY
002	57476004	1	EA	HOSE ASSY
003	95279402	2	EA	ELBOW, 90DEG MALE 37DG FL
004	57475857	1	EA	HOSE ASSY
005	57475998	1	EA	HOSE ASSY
006	95219747	2	EA	FITTING, HYD
007	50212224	2	EA	VALVE, BALL–3/4”
008	95315222	1	EA	FITTING, HYD
009	95264909	1	EA	ELBOW, 90DEG–EXT/INT NPT
010	95702619	1	EA	ADAPTER
011	95775623	1	EA	FITTING, HYD
012	57491011	1	EA	GUARD,DRIVESHAFT–QSK
013	95035424	4	EA	SCREW, CAP–5/8UNC X 2
014	95266409	4	EA	WASHER, BEVEL–5/8
015	95077590	4	EA	NUT, HEX STOP–5/8–11
016	95279378	2	EA	FITTING, HYD
017	95061123	1	EA	NIPPLE,PIPE
018	95264925	1	EA	FITTING, HYD
019	95323358	1	EA	FITTING, STR–EXT NPT RUN
020	95209425	4	EA	WASHER, LOCK–5/8

57470304 AIR CONDITIONING SYSTEM

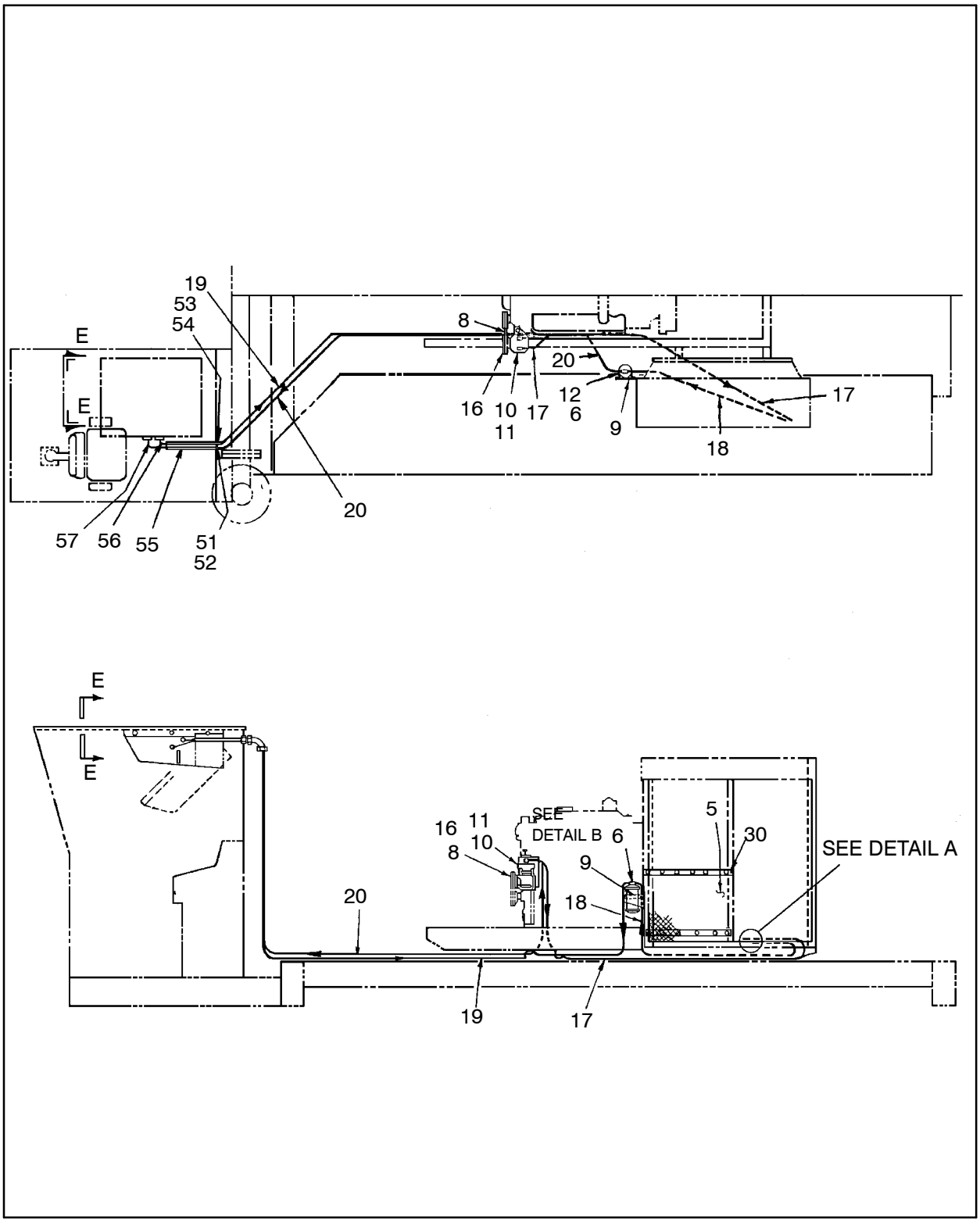

Figure 40 :AIR CONDITIONING SYSTEM
D57470304 REV01

WARNING: This manual contains data SPECIFIC to the drilling rig with serial number: 7341.

57470304 AIR CONDITIONING SYSTEM

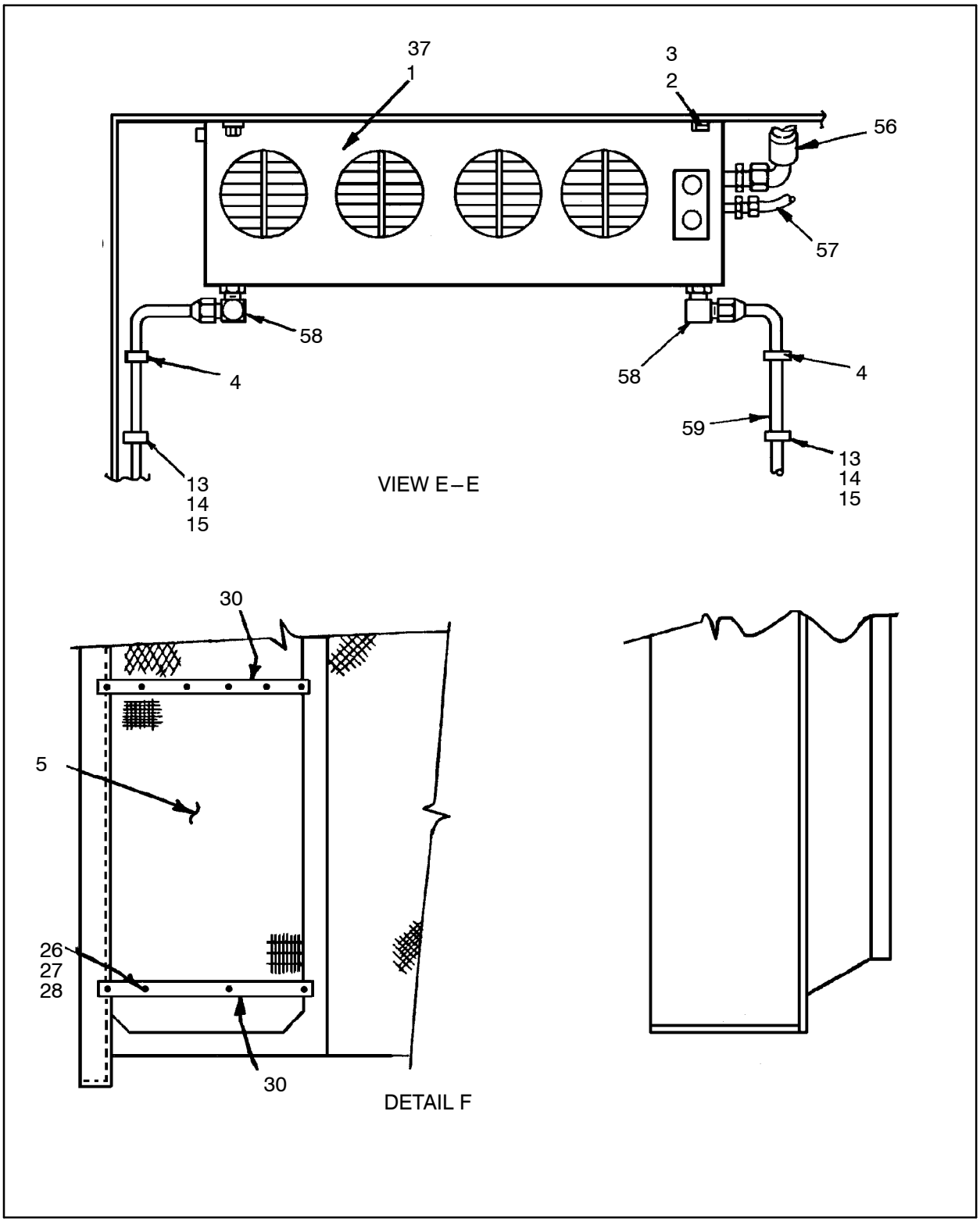

Figure 41 :AIR CONDITIONING SYSTEM
D57470304 REV01

57470304 AIR CONDITIONING SYSTEM

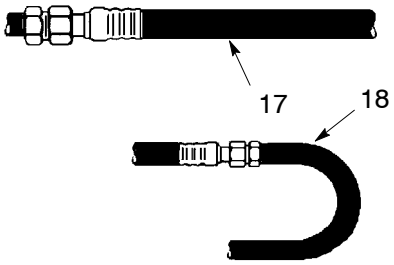

VIEW A

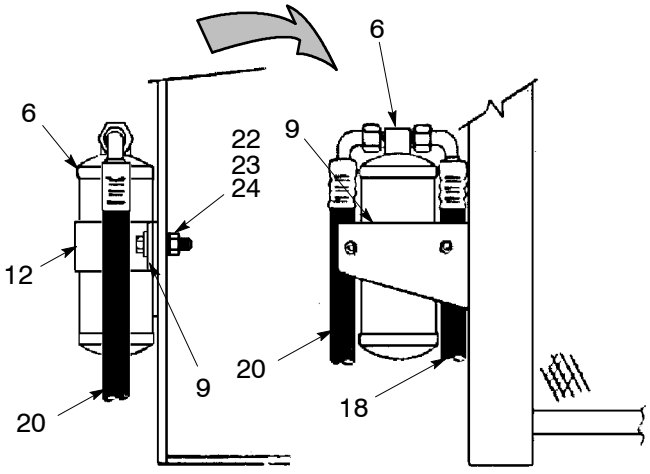

DETAIL C

Figure 42 :AIR CONDITIONING SYSTEM
D57470304 REV01

57470304 AIR CONDITIONING SYSTEM

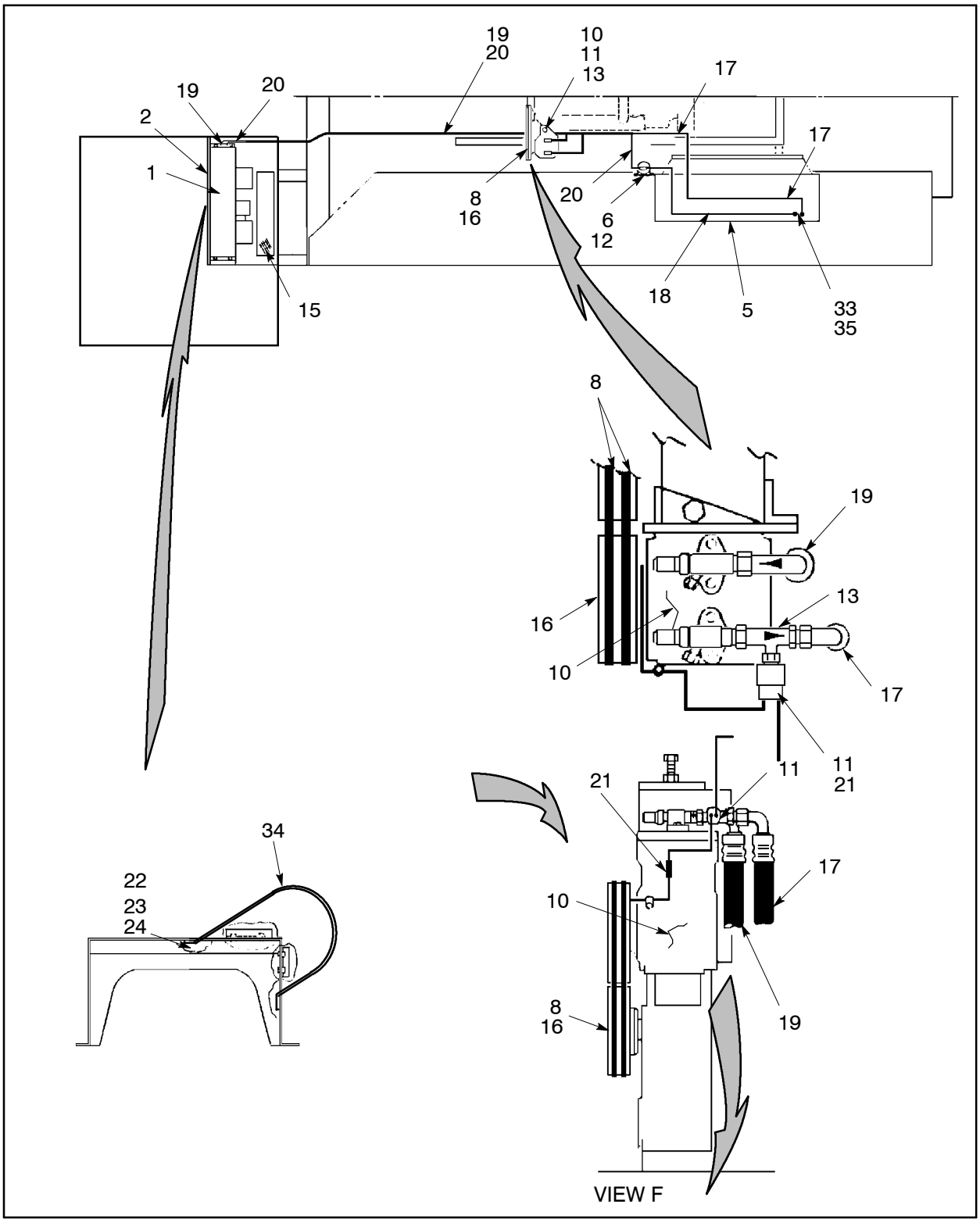

Figure 43 :AIR CONDITIONING SYSTEM
D57470304 REV01

57470304 AIR CONDITIONING SYSTEM

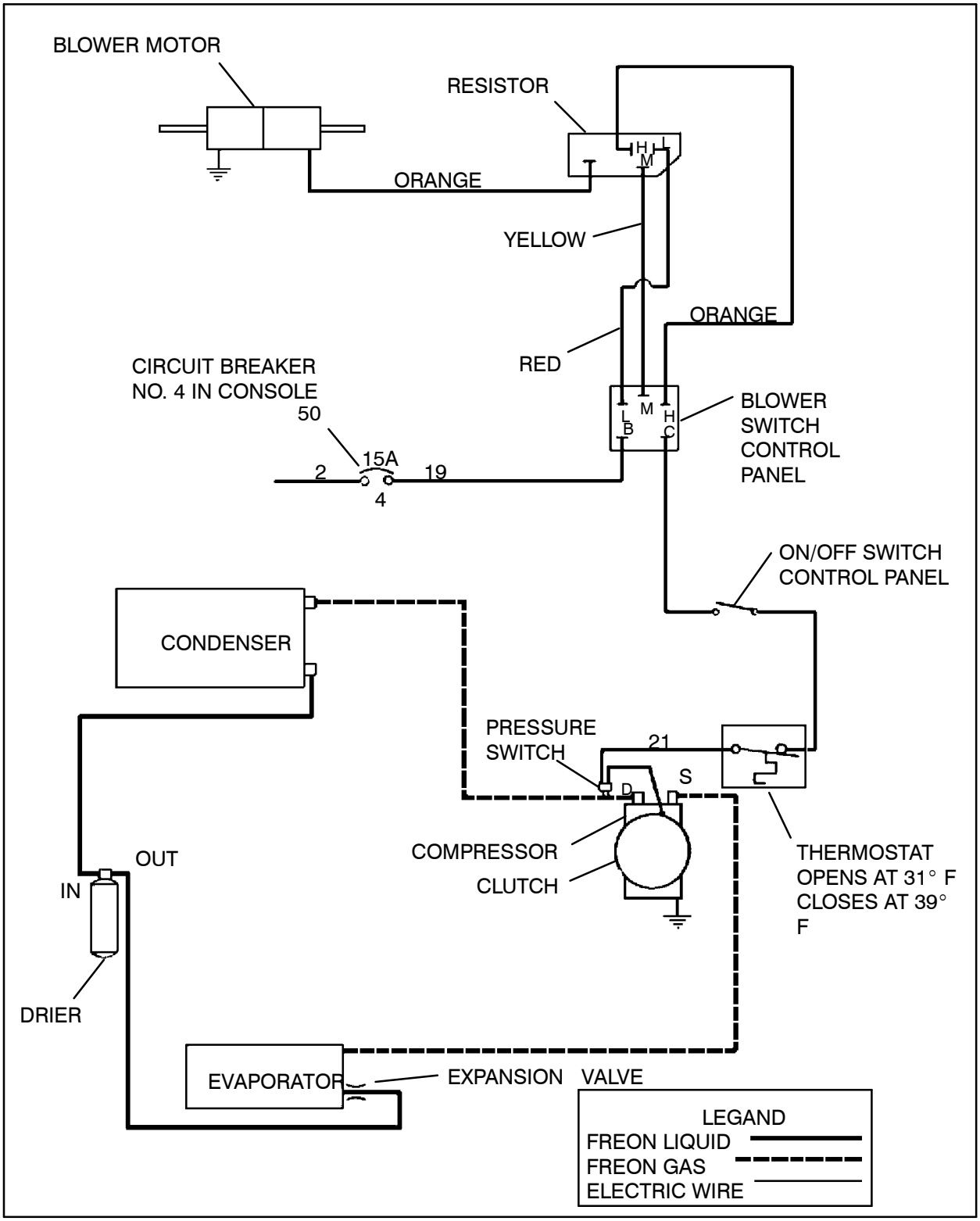

Figure 44 :AIR CONDITIONING SYSTEM
D57470304 REV01

WARNING: This manual contains data SPECIFIC to the drilling rig with serial number: 7341.

57470304 AIR CONDITIONING SYSTEM

REF.	PART NO.	QTY.	UNIT	DESCRIPTION
001	57450611	1	EA	EVAPORATOR–DTAC–310–24V *(See figure 45)*
002	95053047	4	EA	SCREW, CAP–HEX1/2–13X1.25
003	95064697	4	EA	WASHER, FLAT–1/2
004	95301842	4	EA	CLAMP, HOSE
005	57364358	1	EA	COIL, CONDENSER
006	57364366	1	EA	DRIER, RECEIVER
008	95802245	2	EA	V–BELT
009	57097941	1	EA	BRACKET
010	57364341	1	EA	COMPRESSOR, W/ORING PORTS
	57440653	1	EA	● - VALVE,SHUTOFF,SUCTION PRT
	57440661	1	EA	● - O–RING, SHUTOFF VALVE
	57440646	1	EA	● - VALVE,SHUTOFF,DISCHG,PORT
	57440661	1	EA	● - O–RING, SHUTOFF VALVE
010	57364473	7.00	LB	REFRIGERANT, R134A
011	52218294	1	EA	SWITCH
012	57095515	2	EA	CLAMP, DRIER AIR COND.
013	95928982	4	EA	SCREW, CAP–1/4–20 X 3/4
014	95934766	4	EA	WASHER, LOCK–1/4 PLATED
015	95077483	4	EA	SUB 95923298–LOCKNUT,"NE"
016	56909930	1	EA	CLUTCH
017	57377947	1	EA	HOSE ASSY
018	57377954	1	EA	HOSE ASSY
019	57506073	1	EA	HOSE ASSY,–12X256" R134A
020	57413486	1	EA	HOSE ASSY, 6X312", R134A
021	56762248	3	EA	CONNECTOR, SPLICE
022	95928982	10	EA	SCREW, CAP–1/4–20 X 3/4
023	95931564	10	EA	NUT, HEX–1/4–20
024	95934766	10	EA	WASHER, LOCK–1/4 PLATED
025	95103719	8	EA	SUB 95934782–CAPSCREW,HEX(Not Shown)
026	95920674	14	EA	SCREW, CAP–3/8–16 X 1
027	95937413	14	EA	WASHER, LOCK–3/8 PLATED
028	95922894	14	EA	NUT, HEX–3/8–16
030	57481525	2	EA	MOUNTING, CONDENSER
033	95351904	2	EA	CLAMP, HOSE
034	57336117	1	EA	GUARD, A/C DRIVE
035	95301859	2	EA	CLAMP, HOSE
036	57290041	1	EA	DECAL, A/C HEATER FILTER(Not Shown)

57470304 AIR CONDITIONING SYSTEM

REF.	PART NO.	QTY.	UNIT	DESCRIPTION
037	58204934	7	EA	TERMINAL, PUSHON – FEMALE
050	57084055	1	EA	BREAKER, CIRCUIT – 15 AMP
051	57452351	1	EA	FITTING, BULKHEAD – 5/8MALE
	57452369	1	EA	● - NUT,JAM – 5/8 SAE 45’
052	57452369	1	EA	NUT,JAM – 5/8 SAE 45’
053	57452377	1	EA	FITTING, BULKHEAD – 7/8MALE
	57452393	1	EA	● - NUT, JAM – 1/8 SAE 45 DEG
054	57452393	1	EA	NUT, JAM – 1/8 SAE 45 DEG
055	57477820	1	EA	COVER, HOSE – R134A
056	57425696	1	EA	HOSE ASSY
057	57425472	1	EA	HOSE ASSY
058	95329975	2	EA	FITTING, HYD
059	57507121	2	EA	HOSE ASSY

WARNING: This manual contains data SPECIFIC to the drilling rig with serial number: 7341.

57470304 AIR CONDITIONING SYSTEM

This page is blank.

57450611 EVAPORATOR – DTAC – 310 – 24V

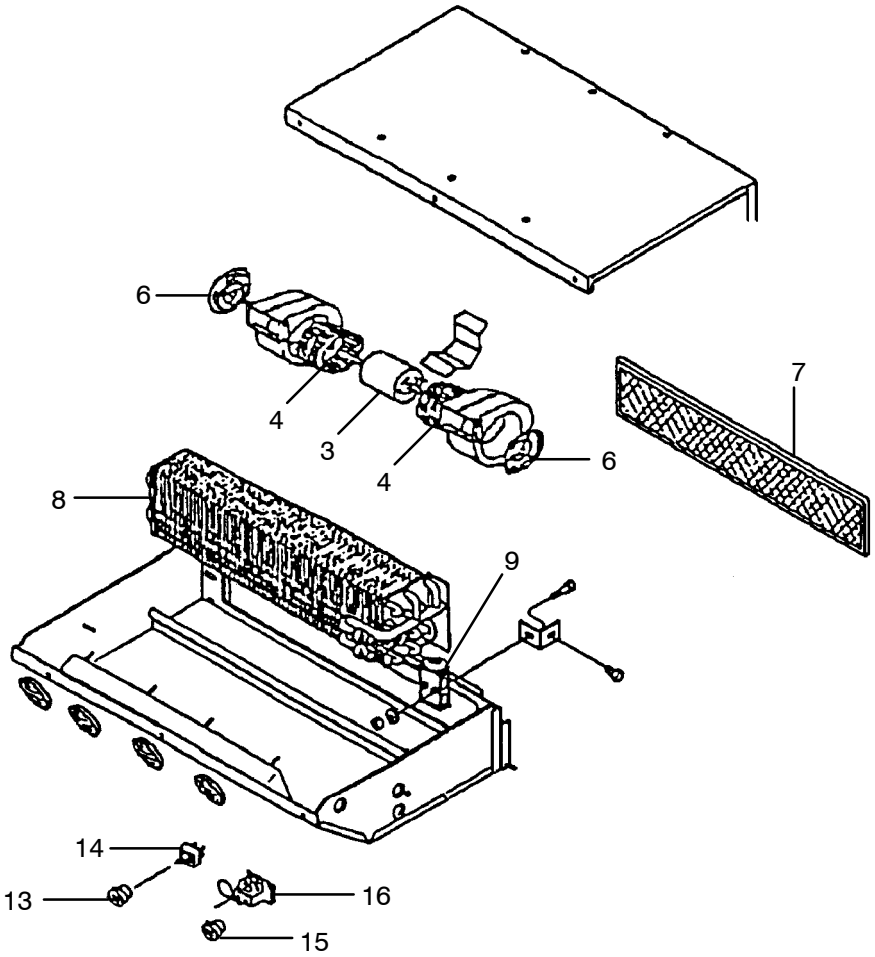

Figure 45 :EVAPORATOR – DTAC – 310 – 24V
C57450611 REV 00

WARNING: This manual contains data SPECIFIC to the drilling rig with serial number: 7341.

57450611 EVAPORATOR–DTAC–310–24V

REF.	PART NO.	QTY.	UNIT	DESCRIPTION
003	57477853	1	EA	MOTOR, 24V–EVAPORATOR
004	57477861	1	EA	WHEEL, BLOWER–CW
004	57477879	1	EA	WHEEL, BLOWER, CCW
006	57477887	2	EA	VENTURI
007	57477895	1	EA	FILTER
008	57477903	1	EA	COIL, EVAPORATOR
009	57477911	1	EA	VALVE, EXPANSION BLOCK
013	57477929	1	EA	KNOB, FAN
014	57477937	1	EA	SWITCH, ROTARY
015	57477945	1	EA	KNOB, TEMPERATURE
016	57477952	1	EA	THERMOSTAT
017	57477960	2.00	IN	HOSE, DRAIN(Not Shown)
018	57477978	1	EA	HARNESS, WIRING(Not Shown)

57403081 ROTARY HEAD, 4SV–1–7.25

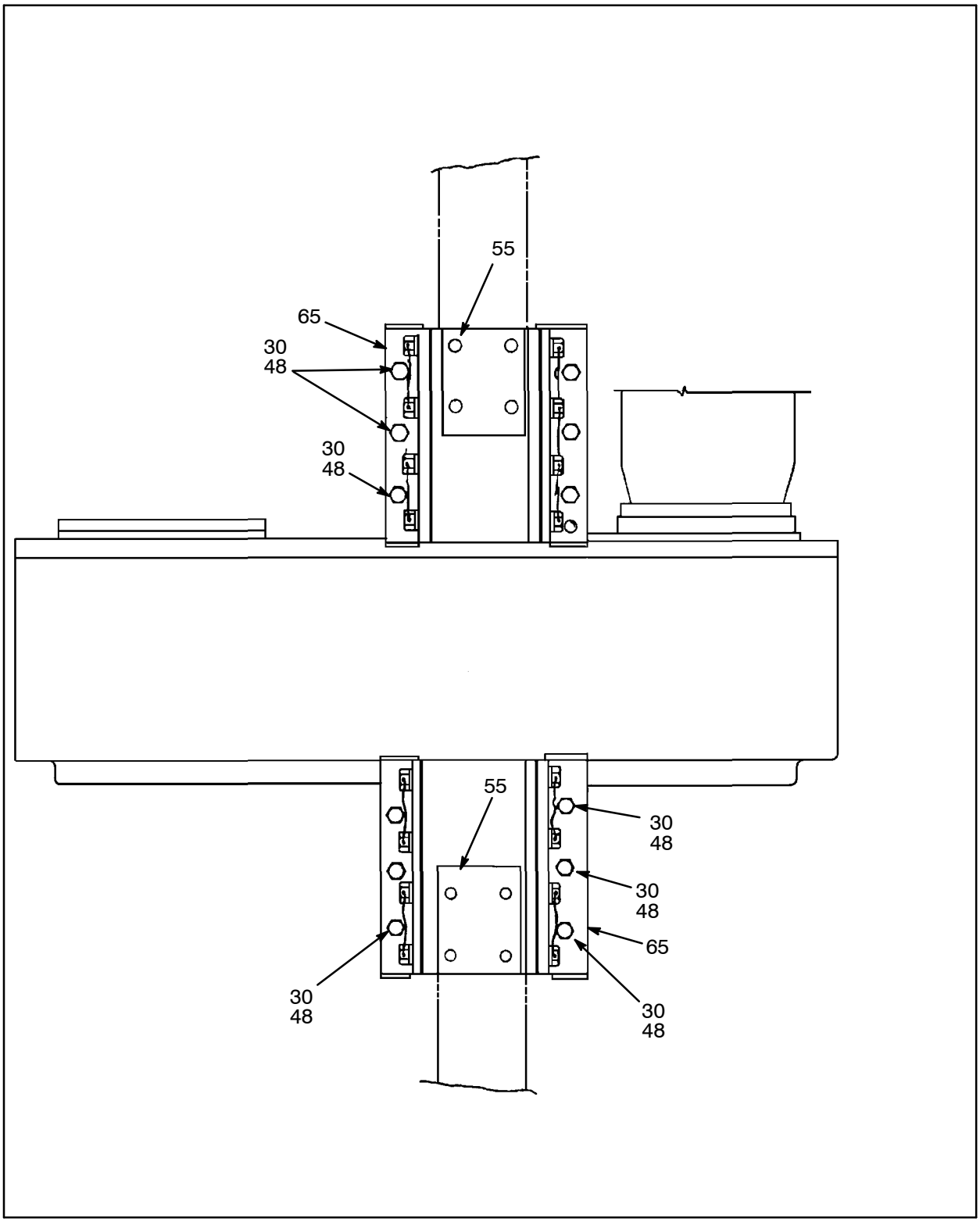

Figure 46 :ROTARY HEAD, 4SV–1–7.25
E57403081 REV 00

57403081 ROTARY HEAD, 4SV–1–7.25

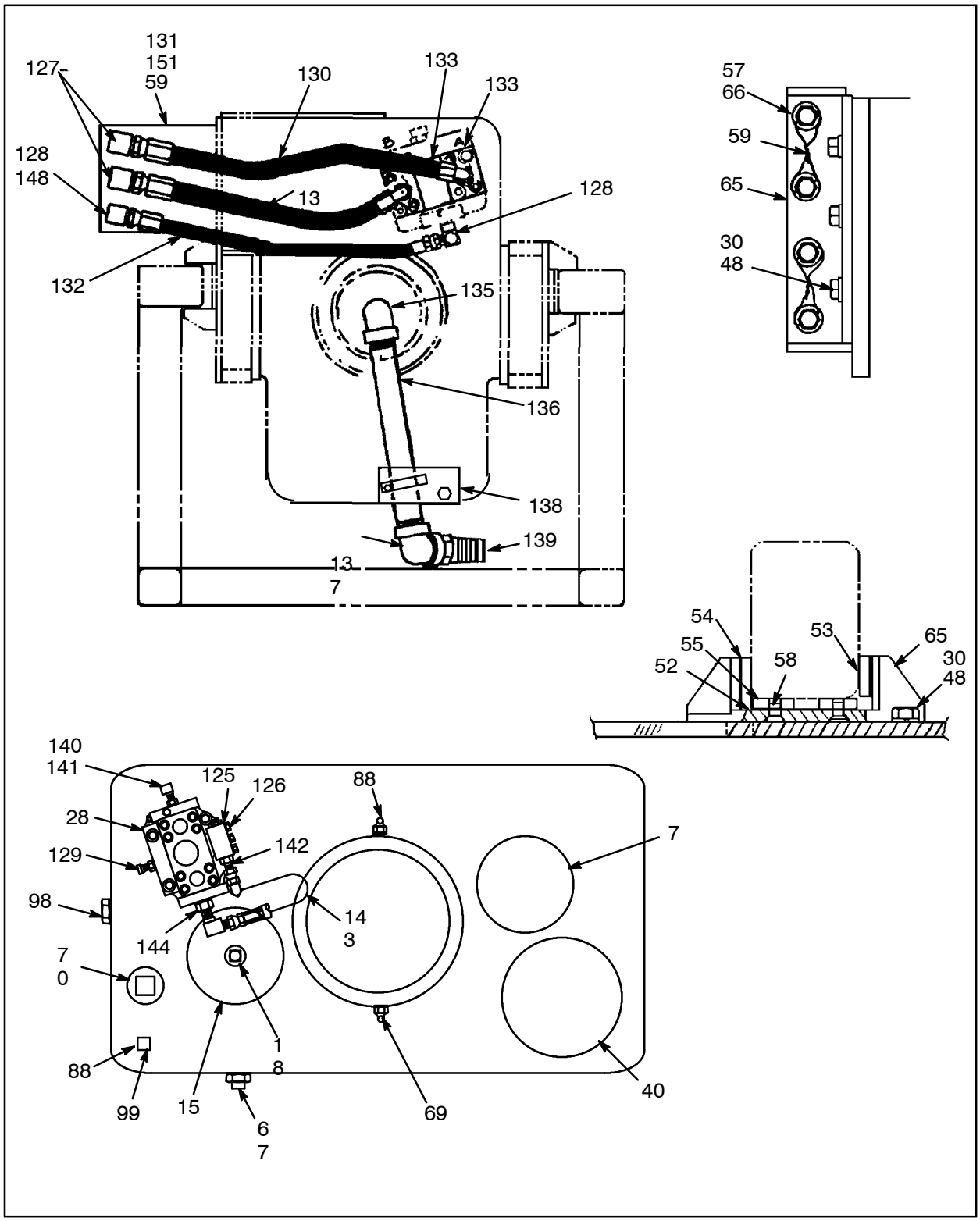

Figure 47 :ROTARY HEAD, 4SV–1–7.25
E57403081 REV 00

57403081 ROTARY HEAD, 4SV–1–7.25

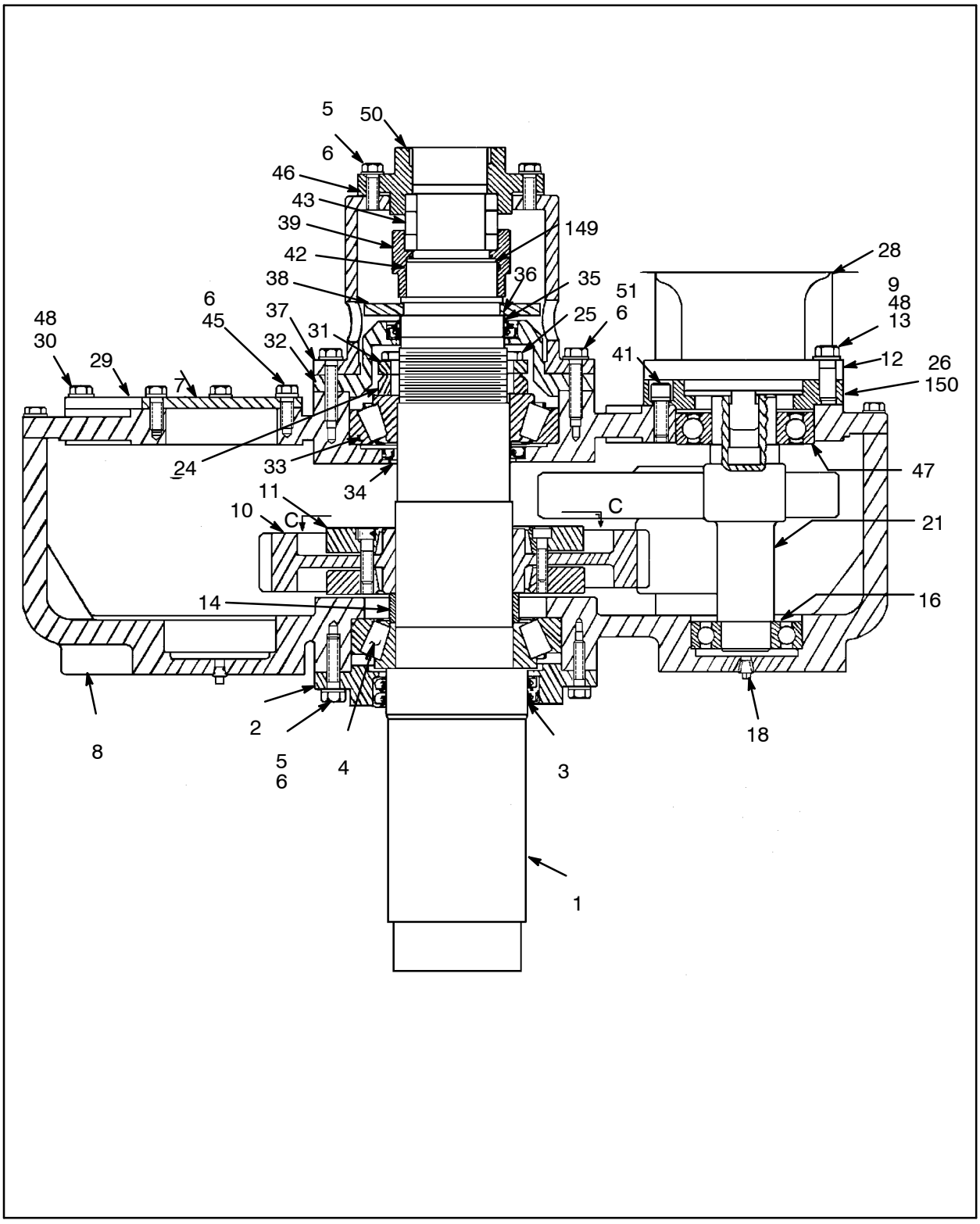

Figure 48 :ROTARY HEAD, 4SV–1–7.25
E57403081 REV 00

WARNING: This manual contains data SPECIFIC to the drilling rig with serial number: 7341.

57403081 ROTARY HEAD, 4SV–1–7.25

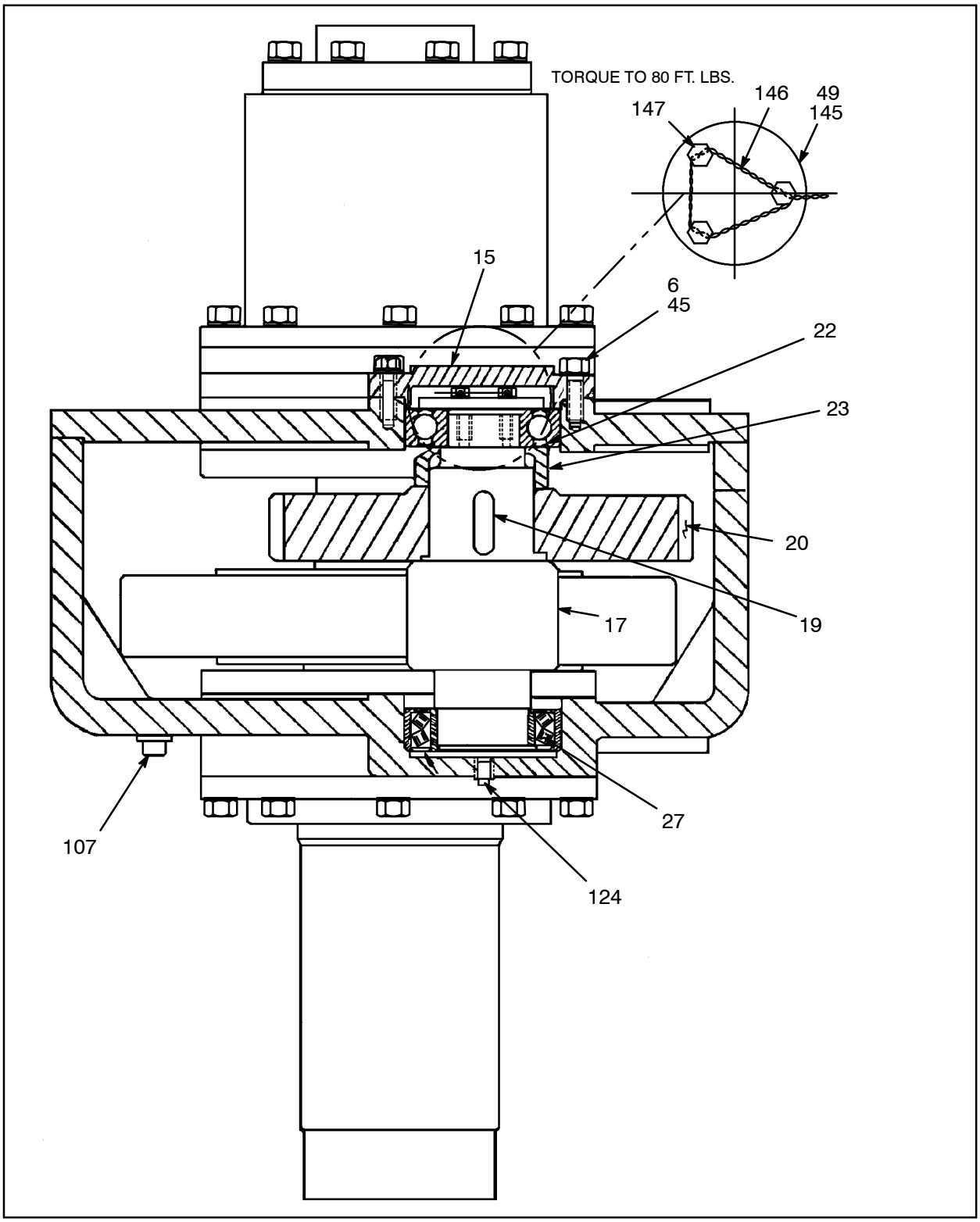

Figure 49 :ROTARY HEAD, 4SV–1–7.25
E57403081 REV 00

57403081 ROTARY HEAD, 4SV–1–7.25

LOCKING NUT INSTALLATION

1. INSTALL TONGUED FLATWASHER ONTO THE SPINDLE WITH THE TONGUE LOCATED IN THE KEYWAY OF THE SPINDLE. ALIGN 6 OF THE 12 HOLES IN THE TONGUED FLATWASHER WITH 6 TAPPED HOLES IN THE ADJUSTING NUT. TURN THE TONGUED FLATWASHER ON EITHER SIDE TO OBTAIN THE CLOSEST ALIGNMENT, THEN TIGHTEN BEARING ADJUSTING NUT TO FINISH ALIGNMENT OF HOLES. **(DO NOT LOOSEN NUT TO ALIGN HOLES)**

2. INSTALL THE 6 SPECIAL SOCKET HEAD CAP SCREWS WITH LOCKING PELLET AND TORQUE TO 20 FT. LBS. (CLEAN AND DRY).
(DO NOT REUSE SOCKET HEAD CAPSCREWS WITHOUT USING LOCKTITE #271 C/N 56784267).

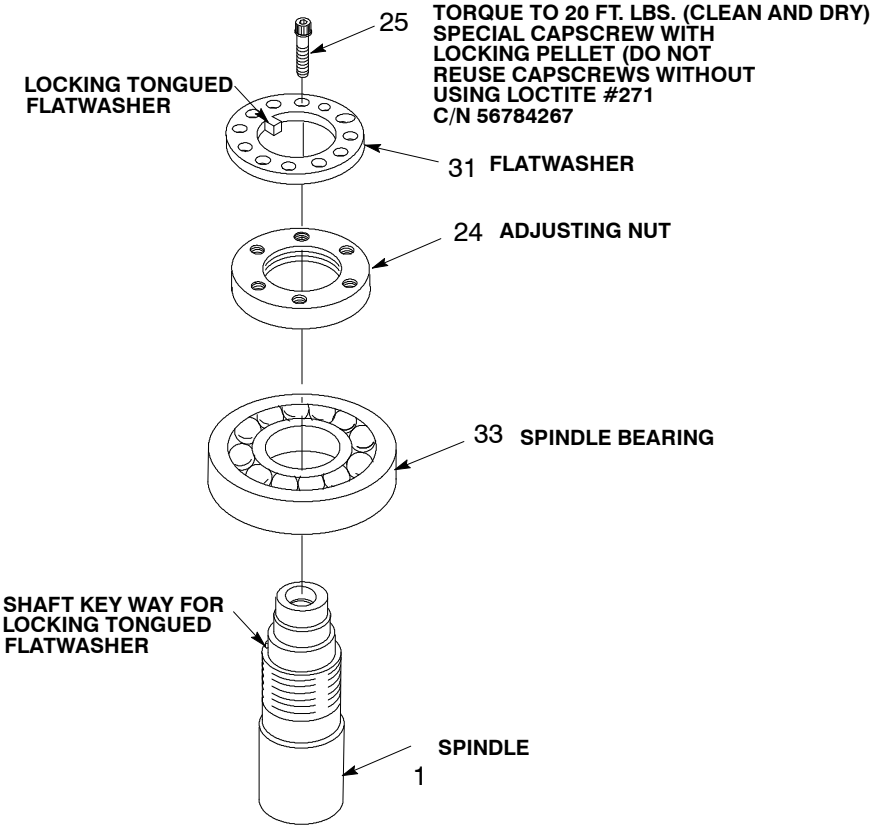

Figure 50 :ROTARY HEAD, 4SV–1–7.25
E57403081 REV 00

WARNING: This manual contains data SPECIFIC to the drilling rig with serial number: 7341.

57403081 ROTARY HEAD, 4SV–1–7.25

REF.	PART NO.	QTY.	UNIT	DESCRIPTION
001	52210275	1	EA	SPINDLE, DRIVE
002	52208931	1	EA	HOUSING, LOWER SEAL
003	52146784	2	EA	SEAL, OIL
004	95434551	1	EA	BEARING, ROLLER
005	95104188	14	EA	SCREW, CAP–1/2–13 X 1–3/4
006	95081824	37	EA	WASHER, LOCK–1/2
007	52180577	1	EA	PLATE, COVER
008	57395444	1	EA	HOUSING, MACHINED
009	95035424	2	EA	SCREW, CAP–5/8UNC X 2
010	52202736	1	EA	GEAR, OUTPUT
011	52210291	1	EA	SHRINK DISCS
----------	57212383	12	EA	● - CAPSCREW–SOC HD METRIC
012	95086724	1	EA	O–RING
013	56951700	2	EA	TUBE
014	52209798	1	EA	SPACER
015	57191025	1	EA	CAP, BEARING
016	95214037	1	EA	BEARING
017	57191017	1	EA	SHAFT, INTERMEDIATE
018	95033585	4	EA	PLUG, PIPE–1/8 SQ HEAD
019	57159139	1	EA	KEY, INTERMEDIATE SHAFT
020	57159113	1	EA	GEAR, INTERMEDIATE
021	57170110	1	EA	PINION, INPUT
022	95434874	1	EA	BEARING
023	57159121	1	EA	SPACER, INTERMEDIATE GEAR
024	57291304	1	EA	NUT, ADJUSTING
025	95270815	6	EA	SCREW, CAP–5/16–18 X 1
026	57368052	1	EA	ADAPTER, MOTOR
027	95711156	1	EA	BEARING, SPHERICAL ROLLER
028	57149163	1	EA	MOTOR,HYDRAULIC–7.25CU IN *(See figure 51)*
029	50702919	1	EA	PLATE, COVER
030	95644126	24	EA	SCREW CAP
031	57291288	1	EA	WASHER, LOCK–TONGUED
032	52248150	1	EA	HOUSING, UPPER SEAL
033	95434569	1	EA	BEARING, ROLLER
034	58229915	1	EA	SEAL, OIL
035	52164282	1	EA	SEAL, OIL
036	50822097	1	EA	SLEEVE, WEAR

57403081 ROTARY HEAD, 4SV–1–7.25

REF.	PART NO.	QTY.	UNIT	DESCRIPTION
037	52248176	1	EA	SWIVEL
038	52187804	1	EA	SLINGER
039	57347379	1	EA	CAP, SPINDLE–SPUR HEAD
041	95055232	2	EA	SCREW, CAP–5/8–11 X 1–1/4
042	50610971	1	EA	RING, THREADED
043	50694876	1	EA	PACKING, SWIVEL
----------	57336067	2	EA	● - PACKING, SWIVEL–30XV
----------	50694934	1	EA	● - WEAR BUSHING
045	95053047	8	EA	SCREW, CAP–HEX1/2–13X1.25
046	52210317	1	EA	SHIM SET
046	57371163	1	EA	SPACER, SWIVEL PACKING
047	52209939	1	EA	BEARING
048	95081790	26	EA	WASHER, LOCK–5/8
049	57243719	1	EA	SHIM, POWER HEAD–SPURGEAR
050	57183329	1	EA	CAP, SWIVEL
051	95104204	8	EA	SCREW, CAP–1/2–13 X 2–1/4
052	57149080	8	EA	SHIM
053	57386427	8	EA	GUIDE,BLOCK–LONG R.H.
054	50624709	32	EA	SHIM, GUIDE
055	57376832	4	EA	GUIDE SLIDE – R.H.
057	95064697	16	EA	WASHER, FLAT–1/2
058	95293460	16	EA	SCREW, CAP–1/2–13 X 7/8
059	50344605	12.00	FT	WIRE, LOCK
065	57143778	4	EA	GUIDE, FINISHED POWERHEAD
066	95157731	32	EA	SCREW, CAP–1/2 X 1.5
067	95249587	1	EA	PLUG, PIPE–3/8 SQ HEAD
069	95201281	1	EA	FITTING, LUBE
070	95249694	1	EA	PLUG, PIPE–2” SQ HEAD
088	95246724	2	EA	FITTING, LUBE
098	52253176	1	EA	GAUGE, SIGHT
099	95040952	1	EA	ELBOW, STREET–90DEG1/8NPT
107	50137256	1	EA	PLUG, DRAIN
118	58209651	44.00	QT	OIL, GEAR
119	52180957	1.00	LB	GREASE
120	50700731	0.50	EA	COMPOUND, SILICONE
124	95653317	2	EA	FITTING, HYD

WARNING: This manual contains data SPECIFIC to the drilling rig with serial number: 7341.

57403081 ROTARY HEAD, 4SV–1–7.25

REF.	PART NO.	QTY.	UNIT	DESCRIPTION
125	57167298	1	EA	VALVE, MOTOR CONTROL
	57177990	1	EA	● - CARTRIDGE,SHUTTLE
	57439077	1	EA	● - SEAL KIT, CART. VALVE
	57177982	1	EA	● - CARTRIDGE, P. REDUCING
	95018065	3	EA	● - O–RING
126	95958948	3	EA	SCREW, CAP–5/16–18 X 3
127	57174070	2	EA	FITTING,L90,20OFS X 20SAE
128	57167934	2	EA	FITTING, L90–120FS X12SAE
129	57326514	1	EA	VALVE, RELIEF (ATM)
130	57439895	1	AS	HOSE ASSY
131	57400764	1	EA	BRACKET, HOSE, ROT. HYD.
132	57298069	1	EA	HOSE ASSY
133	56950579	2	EA	KIT,SPLIT FLANGE
134	57439564	1	AS	HOSE ASSY
135	95238523	1	EA	ELBOW STREET
136	57396707	1	EA	NIPPLE,PIPE–2”SCH80 24”LG
137	95651683	1	EA	ELBOW, PIPE
138	57083552	1	EA	CLAMP
139	50023910	1	EA	STEM
140	95650156	1	EA	ADAPTER
141	57328676	1	EA	FITTING, TEST
142	57319618	1	EA	FITTING,STR,06OFS X 06SAE
143	57342891	1	EA	HOSE ASSY
144	57308686	1	EA	FITTING,L90,06OFS X 08SAE
145	57191033	1	EA	PLATE, END
146	50344605	2.00	FT	WIRE, LOCK
147	95101762	3	EA	SCREW, CAP–1/2–13 X 1GRD8
148	95650149	1	EA	ADAPTER
149	95086625	1	EA	O–RING
150	95097929	1	EA	O–RING
151	95705364	6	EA	SCREW,CAP

57149163 MOTOR,HYDRAULIC – 7.25CU IN

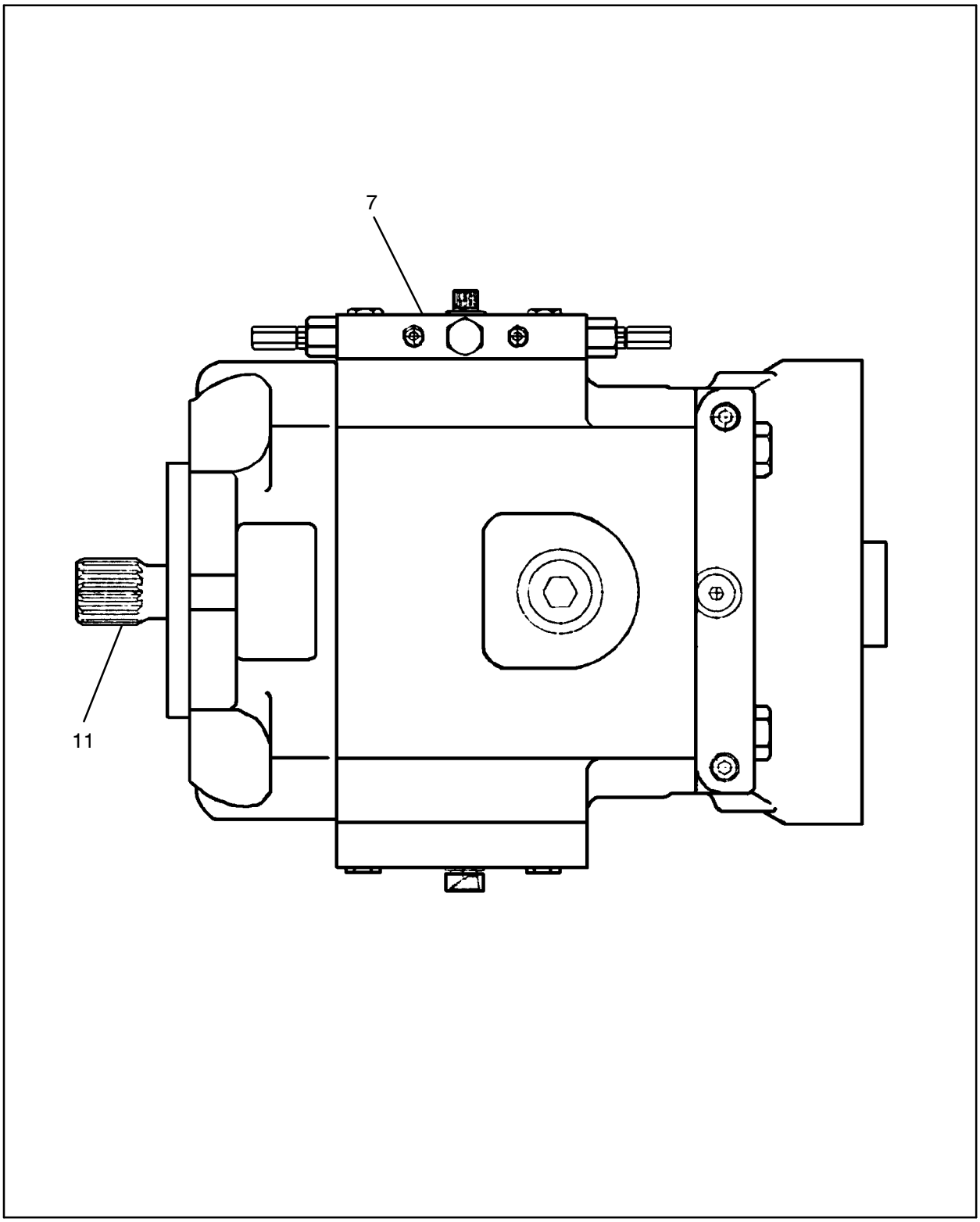

Figure 51 :MOTOR,HYDRAULIC – 7.25CU IN
E57149163 REV02

57149163 MOTOR,HYDRAULIC – 7.25CU IN

REF.	PART NO.	QTY.	UNIT	DESCRIPTION	
007	57300212	1	EA	SHAFT, MOTOR	
	57300220	1	EA	● - SHAFT, MOTOR	
008	57089039	1	EA	KIT,SEAL	(NOT SHOWN)
009	57089047	1	EA	KIT,SEAL	(NOT SHOWN)
	52155053	1	EA	● - GASKET	
	52154952	1	EA	● - GASKET	
	52155363	2	EA	● - SEAL	
	95097663	3	EA	● - O – RING	
	95097689	1	EA	● - O – RING	
	95086229	1	EA	● - O – RING	
	57337297	2	EA	● - O – RING	
	52144243	3	EA	● - O – RING	
	52203767	2	EA	● - O – RING	
	52155314	2	EA	● - O – RING	
	52154937	1	EA	● - O – RING	
	52154994	2	EA	● - O – RING	
	50943331	1	EA	● - KIT,SEAL – SHT	
010	57089054	1	EA	KIT,SEAL	(NOT SHOWN)
011	57480048	1	EA	SERVO, INPUT – MOTOR A SIDE	*(See figure 52)*

57480048 SERVO, INPUT – MOTOR A SIDE

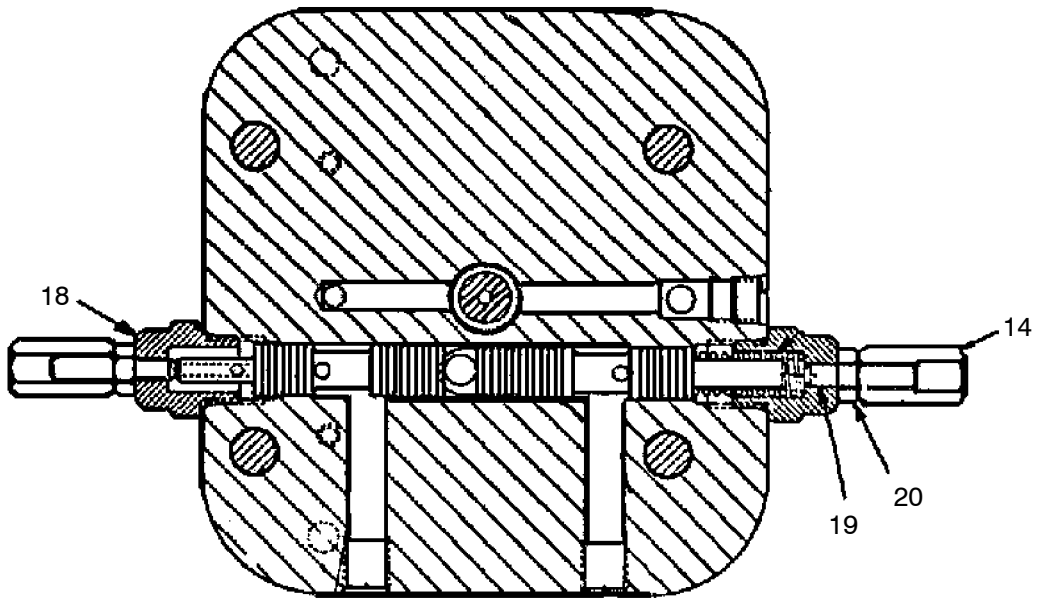

Figure 52 :SERVO, INPUT – MOTOR A SIDE
D57480048 REV 00

WARNING: This manual contains data SPECIFIC to the drilling rig with serial number: 7341.

57480048 SERVO, INPUT – MOTOR A SIDE

REF.	PART NO.	QTY.	UNIT	DESCRIPTION
014	57104895	2	EA	COVER, NUT
018	57480055	2	EA	PLUG, B POWER HEAD
019	57239717	2	EA	SCREW, SET
020	57104937	2	EA	NUT, JAM

57445660 ROD CATCHER ASSEMBLY

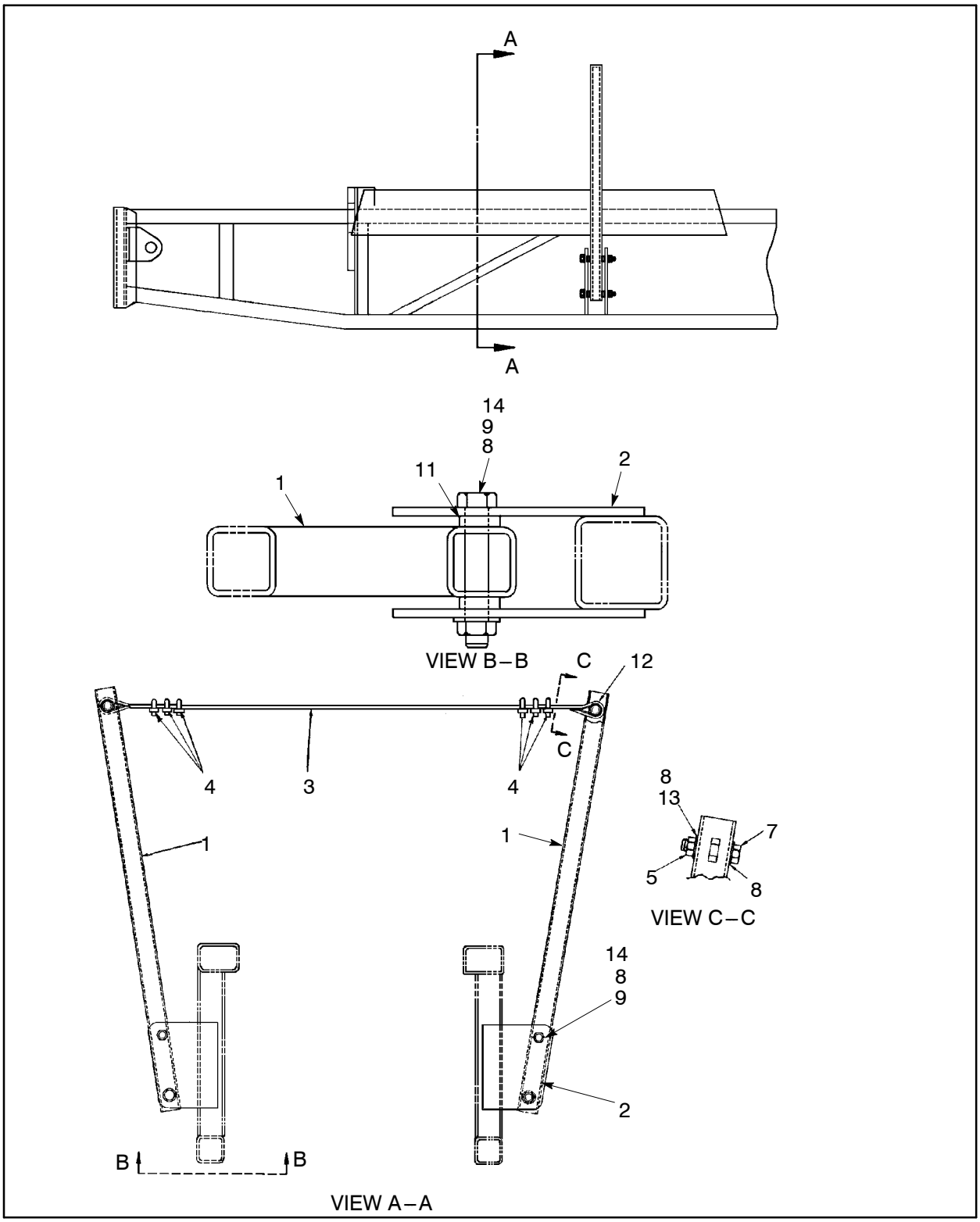

Figure 53 :ROD CATCHER ASSEMBLY
D57445660 REV 002

WARNING: This manual contains data SPECIFIC to the drilling rig with serial number: 7341.

57445660 ROD CATCHER ASSEMBLY

REF.	PART NO.	QTY.	UNIT	DESCRIPTION
001	57445678	2	EA	TUBING, ROD CATCHER
002	57445702	4	EA	PLATE, MOUNT
003	57047060	1	EA	ROPE, WIRE
004	56804750	6	EA	CLAMP,CABLE
005	95077244	2	EA	NUT,HEX STOP–1”–8
007	95105185	2	EA	SCREW CAP
008	95081642	12	EA	WASHER, FLAT–1”
009	95077244	4	EA	NUT,HEX STOP–1”–8
011	57188963	8	EA	SPACER,.5X1.75ODX1.06ID
012	50000553	2	EA	THIMBLE,WIRE
013	95228169	2	EA	WASHER, LOCK–1”
014	95651253	4	EA	SCREW,CAP

57520033 BREAKOUT COMMONS – SLIDING

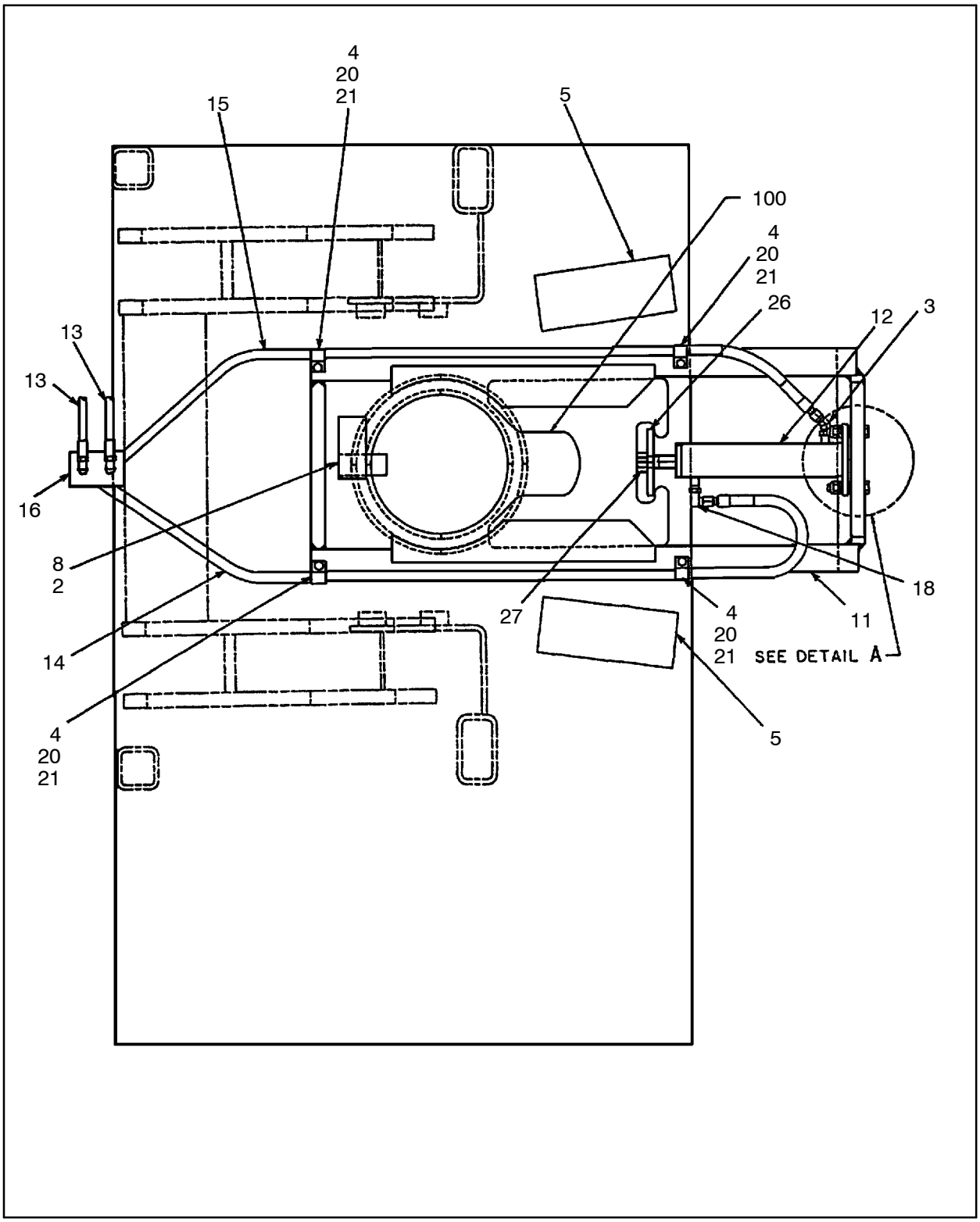

Figure 54 :BREAKOUT COMMONS – SLIDING
D57505398 REV 000

WARNING: This manual contains data SPECIFIC to the drilling rig with serial number: 7341.

57520033 BREAKOUT COMMONS – SLIDING

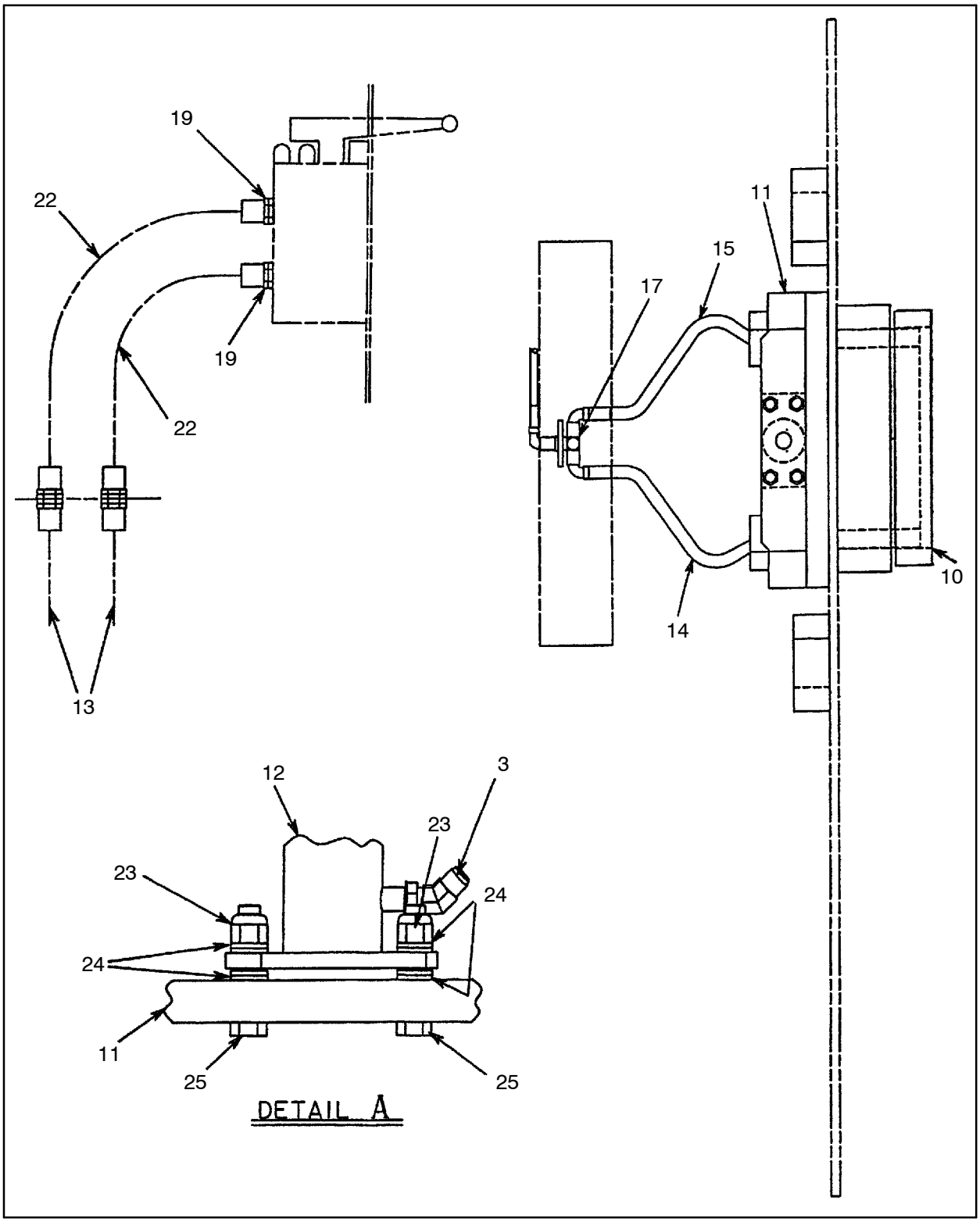

Figure 55 :BREAKOUT COMMONS – SLIDING
D57505398 REV 000

57520033 BREAKOUT COMMONS–SLIDING

REF.	PART NO.	QTY.	UNIT	DESCRIPTION
002	57198939	1	EA	STOP BLOCK, CENT. BUSH
003	95363339	1	EA	ADAPTER,45DEG–ORING/JIC
004	95310231	2	EA	CLAMP, HOSE
005	57505224	2	EA	STOP
008	57198921	1	EA	BLOCK
010	57200628	1	EA	RING, RETAINING–BREAKOUT
011	57443939	1	EA	BASE, FAB–SLIDING BRKOUT
012	57498297	1	EA	CYLINDER, HYDRAULIC
	57349185	1	EA	● - KIT,SEAL CYLINDER HYD
013	57133225	2	EA	HOSE ASSY
014	56968365	1	EA	HOSE ASSY
015	56968365	1	EA	HOSE ASSY
016	57231839	1	EA	BRACKET
017	50932268	2	EA	FITTING, HYD
018	95329975	1	EA	FITTING, HYD
019	95356903	2	EA	FITTING, HYD
020	95103743	2	EA	SUB 95934550–CAPSCREW,HEX
021	95937413	2	EA	WASHER, LOCK–3/8 PLATED
022	56961816	2	EA	HOSE ASSY
023	95260055	4	EA	NUT,HEX LOCK–1/2–13
024	35898246	8	EA	WASHER
025	95087409	4	EA	SCREW, CAP–1/2–13 X 2–1/2
026	57530537	1	EA	RETRACTOR, PIVOTING
027	95210480	1	EA	NUT,HEX–7/8–9
100	57443913	1	EA	FORK, 3.5”

WARNING: This manual contains data SPECIFIC to the drilling rig with serial number: 7341.

57520033 BREAKOUT COMMONS – SLIDING

This page is blank.

57525321 ROD CHANGER – 5)4 – 1/2X25'

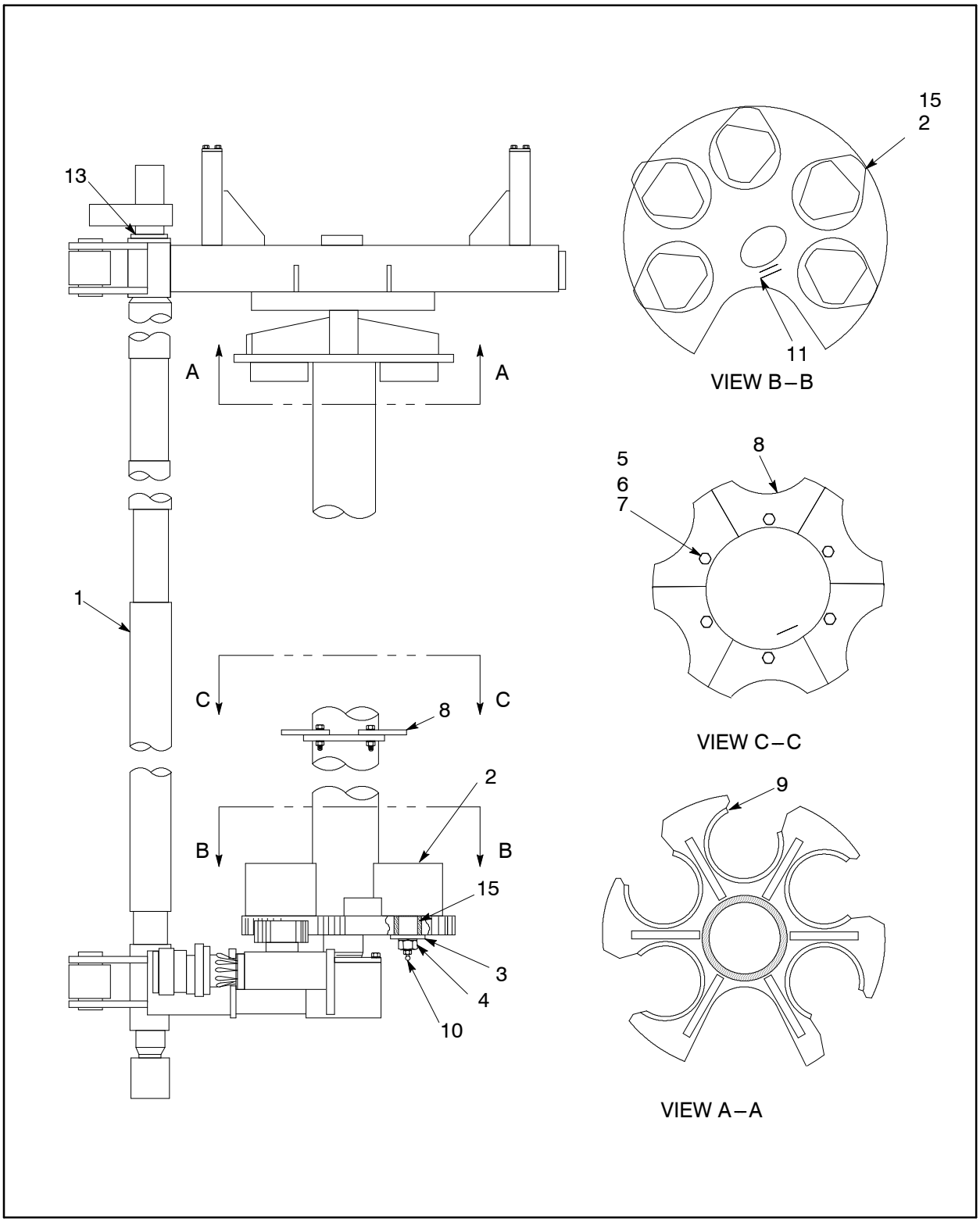

Figure 56 :ROD CHANGER – 5)4 – 1/2X25'

D57393902 REV 007

57525321 ROD CHANGER–5)4–1/2X25'

REF.	PART NO.	QTY.	UNIT	DESCRIPTION	
001	57523425	1	AS	ROD CHANGER SUB ASSY, 25'	*(See figure 57)*
002	50245422	5	EA	CHUCK, ROD–4" HEX	
003	50519560	5	EA	PLATE, ROD CHUCK LOCKING	
004	50519578	5	EA	BOLT, ROD CHUCK	
005	95935128	6	EA	SCREW,CAP–3/8–16 X 2	
006	95922894	6	EA	NUT, HEX–3/8–16	
007	95937413	6	EA	WASHER, LOCK–3/8 PLATED	
008	50415256	6	EA	ADAPTER, MIDDLE–4.5"RODS	
009	50415454	5	EA	ADAPTER, UPPER–4.5"RODS	
010	95201281	5	EA	FITTING, LUBE	
011	50519586	1.00	ST	STOP, ROD CUP	
013	52185162	2	EA	SPACER–ROD CHANGER	
015	57083479	5	EA	BUSHING, ROD CHUCK–STEEL	

57523425 ROD CHANGER SUB ASSY, 25'

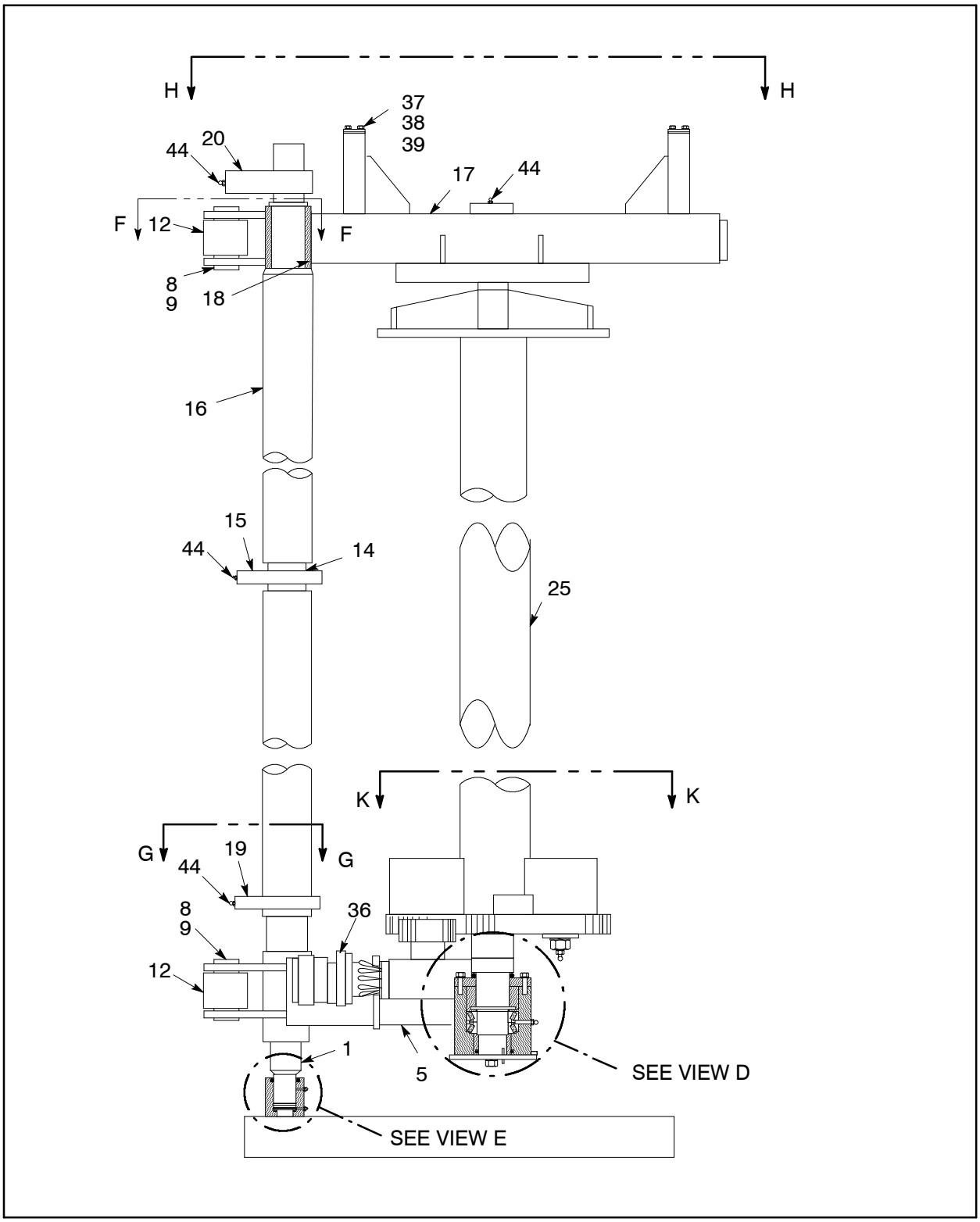

Figure 57 :ROD CHANGER SUB ASSY, 25'
E57523425 REV 000

WARNING: This manual contains data SPECIFIC to the drilling rig with serial number: 7341.

57523425 ROD CHANGER SUB ASSY, 25'

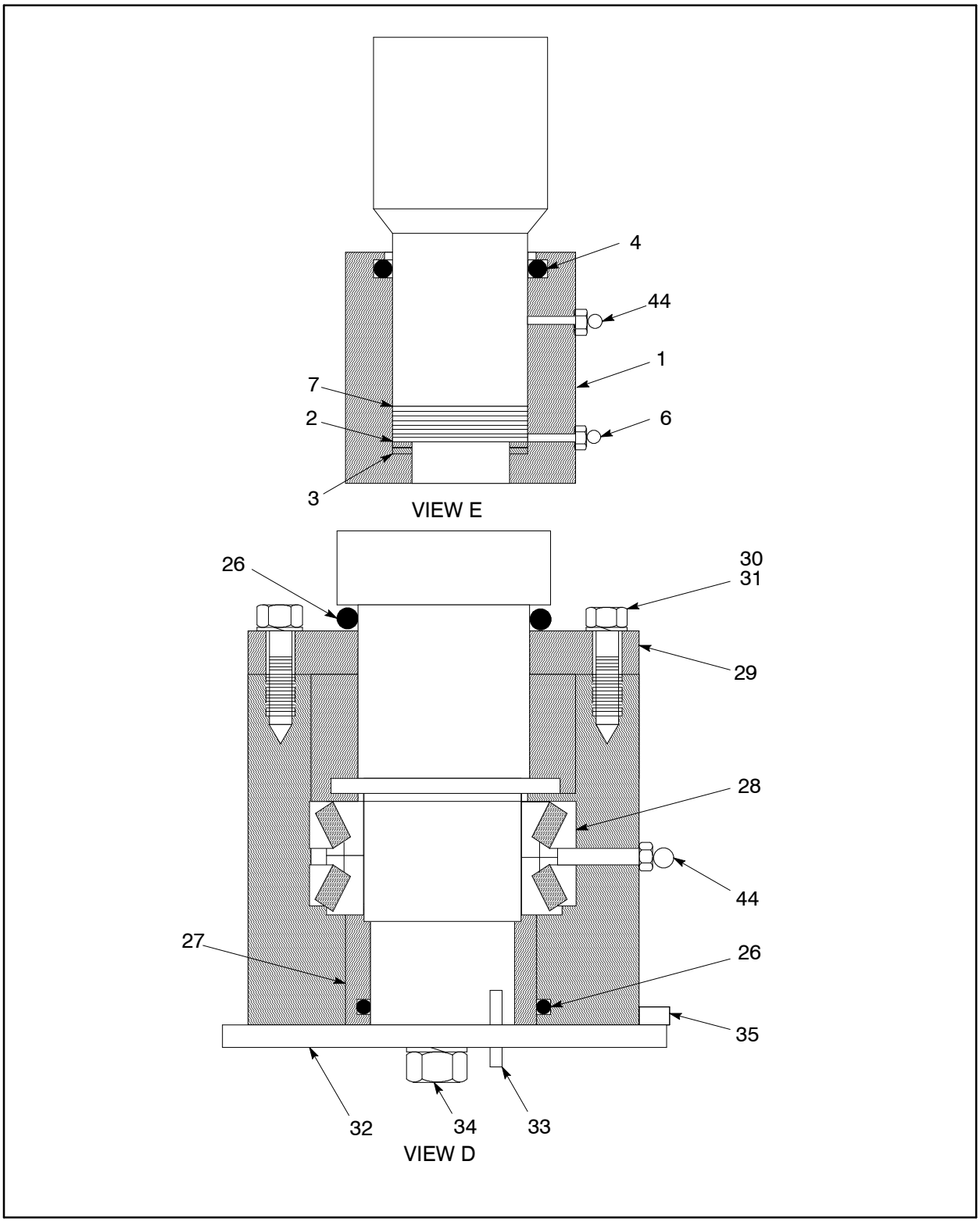

Figure 58 :ROD CHANGER SUB ASSY, 25'
E57523425 REV 000

57523425 ROD CHANGER SUB ASSY, 25'

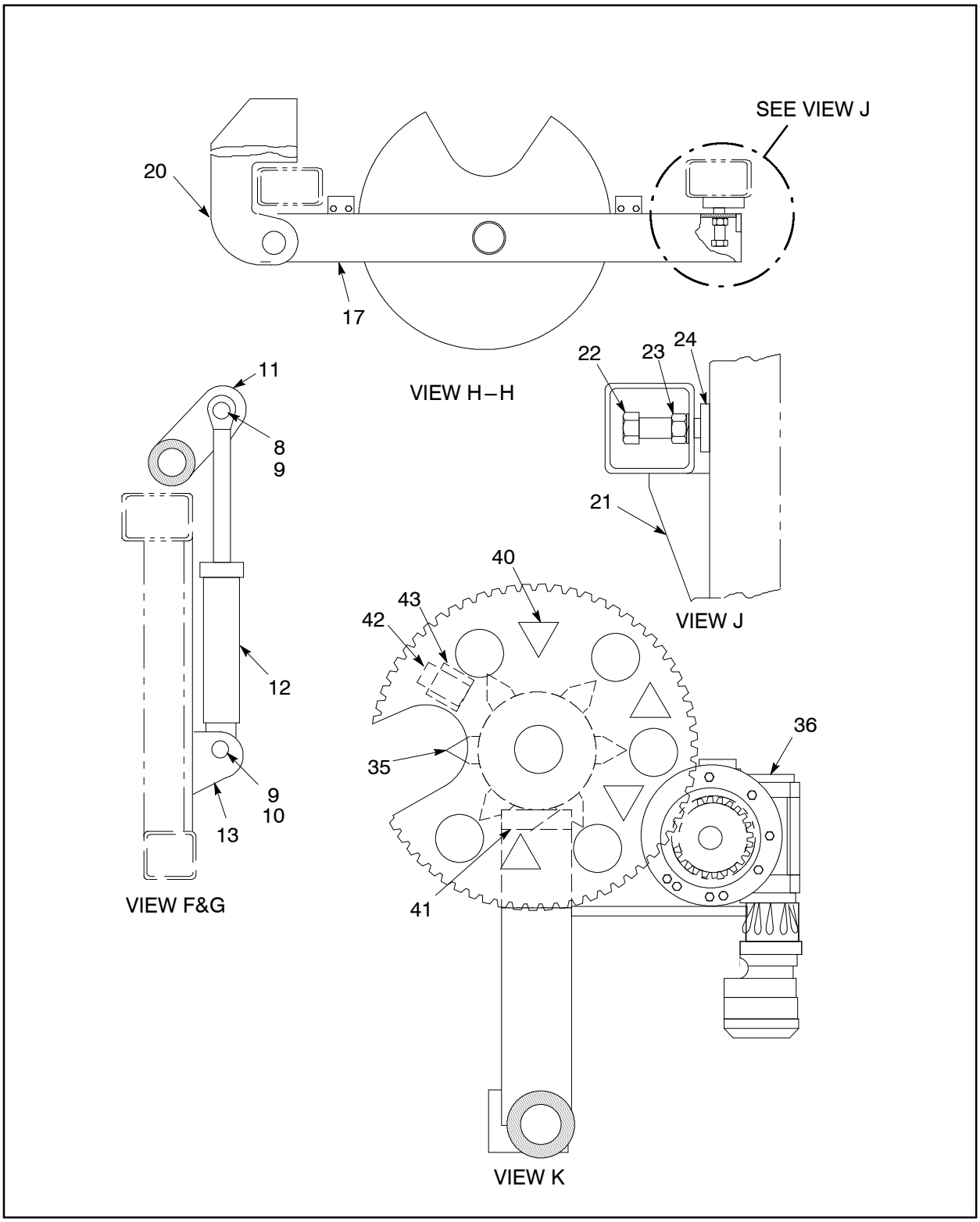

Figure 59 :ROD CHANGER SUB ASSY, 25'
E57523425 REV 000

WARNING: This manual contains data SPECIFIC to the drilling rig with serial number: 7341.

57523425 ROD CHANGER SUB ASSY, 25'

REF.	PART NO.	QTY.	UNIT	DESCRIPTION	
001	57405987	1	EA	BEARING, LOWER	
002	50458959	1	EA	BEARING, THRUST	
003	50219534	2	EA	RACE, THRUST	
004	50170422	1	EA	SEAL, ROD WIPER	
005	57406084	1	EA	ARM COMPLETE–LOWER	
006	95705547	1	EA	FITTING, LUBE	
007	50412998	3	EA	SHIM	
008	57406068	2	EA	PIN–CYLINDER, ROD CHANGER	
009	95210852	4	EA	PIN, COTTER–3/16 X 2–1/2	
010	57268112	2	EA	PIN,CYLINDER	
011	57406035	4	EA	PLATE–SWING CYLINDER	
012	57199093	2	EA	CYLINDER, HYDRAULIC	*(See figure 60)*
013	57406050	2	EA	BRACKET–SWING CYLINDER	
014	57405979	1	EA	SHAFT, SUPPORT–MIDDLE	
015	57405961	1	EA	SUPPORT MIDDLE–ROD CHNG	
	95081824	2	EA	● - WASHER, LOCK–1/2	
016	57523433	1	EA	SHAFT, PIPE ASSY–25'RDCHG	
017	57406027	1	EA	ARM COMPLETE–UPPER	
018	95308573	1	EA	KEY, SQUARE–1/2 X 6	
019	57405953	1	EA	SUPPORT LOWER–ROD CHNGR	
	95081808	2	EA	● - WASHER, LOCK–3/4	
020	57405946	1	EA	SUPPORT UPPER– ROD CHNGR	
	95081824	4	EA	● - WASHER, LOCK–1/2	
021	57406076	1	EA	BLOCK, SUPPORT–ROD CHNGR	
022	95105110	1	EA	SCREW, CAP–1–8 X 3–1/2	
023	95077749	1	EA	NUT, HEX–1"–8	
024	57083206	1	EA	BAR, FLAT	
025	57229023	1	EA	HOLDER ASSY. 5 ROD 25'	
026	95018271	2	EA	O–RING	
027	50248426	1	EA	SPACER	
028	50243518	1	EA	BEARING ASSY	
029	50248368	1	EA	RETAINER, BEARING	
030	95104170	8	EA	SCREW, CAP–1/2–13 X 1–1/2	
031	95081824	8	EA	WASHER, LOCK–1/2	
032	57339905	1	EA	INDICATOR,CARROUSEL–5 ROD	
033	95213310	1	EA	PIN, ROLL	
034	95943726	1	EA	CAP SCREW – 1"NCX2NYLOCK	

57523425 ROD CHANGER SUB ASSY, 25'

REF.	PART NO.	QTY.	UNIT	DESCRIPTION
035	57342719	1	EA	POINTER
036	57199051	1	AS	MOTOR & GEAR REDUCR ASSY* *(See figure 61)*
037	50244086	8	EA	SHIM
038	95103743	4	EA	SUB 95934550–CAPSCREW,HEX
039	95937413	4	EA	WASHER, LOCK–3/8 PLATED
040	57212474	4	EA	STOP BLOCK, PIPE CUP
041	57209306	1	EA	STOP BLOCK, BULL GEAR
042	57209314	1	EA	STOP BLOCK, BULL GEAR
043	57106536	1	EA	BAR,FLAT
044	95201281	10	EA	FITTING, LUBE
045	57368102	1	AS	DWG, STOP LOC.–GEAR INDEX
046	57412439	1	EA	BAR FLAT, 1X3.50X8.00

WARNING: This manual contains data SPECIFIC to the drilling rig with serial number: 7341.

57523425 ROD CHANGER SUB ASSY, 25'

This page is blank.

57199093 CYLINDER, HYDRAULIC

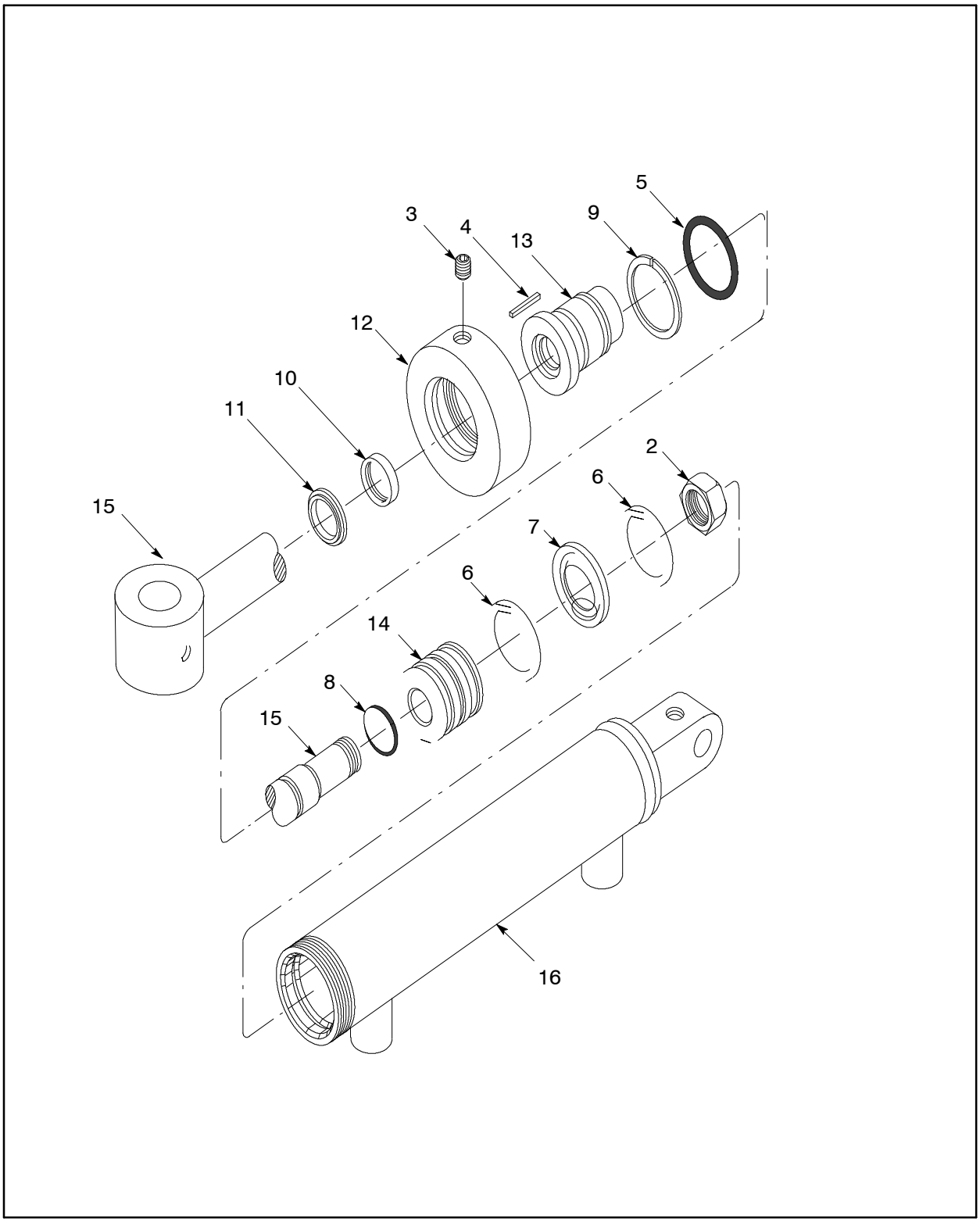

Figure 60 :CYLINDER, HYDRAULIC
E57199093 REV01

WARNING: This manual contains data SPECIFIC to the drilling rig with serial number: 7341.

57199093 CYLINDER, HYDRAULIC

REF.	PART NO.	QTY.	UNIT	DESCRIPTION
001	57242547	0	EA	SEAL KIT
002	57242554	1	EA	LOCKNUT
003	57012684	3	EA	SCREW, SET
004	57012676	3	EA	PLUG, NYLON
005	57242562	1	EA	O-RING
006	57242570	2	EA	RING, CAST IRON
007	57242588	1	EA	DISC 25
008	57224081	1	EA	O-RING
009	57224099	1	EA	RING, BACK-UP
010	57224115	1	EA	U-CUP, LOADED
011	57224123	1	EA	WIPER
012	57242596	1	EA	HEADCAP
013	57242604	1	EA	HEAD
014	57242612	1	EA	PISTON
015	57242638	1	EA	ROD ASSY
016	57242620	1	EA	TUBE ASSY

57199051 MOTOR & GEAR REDUCR ASSY*

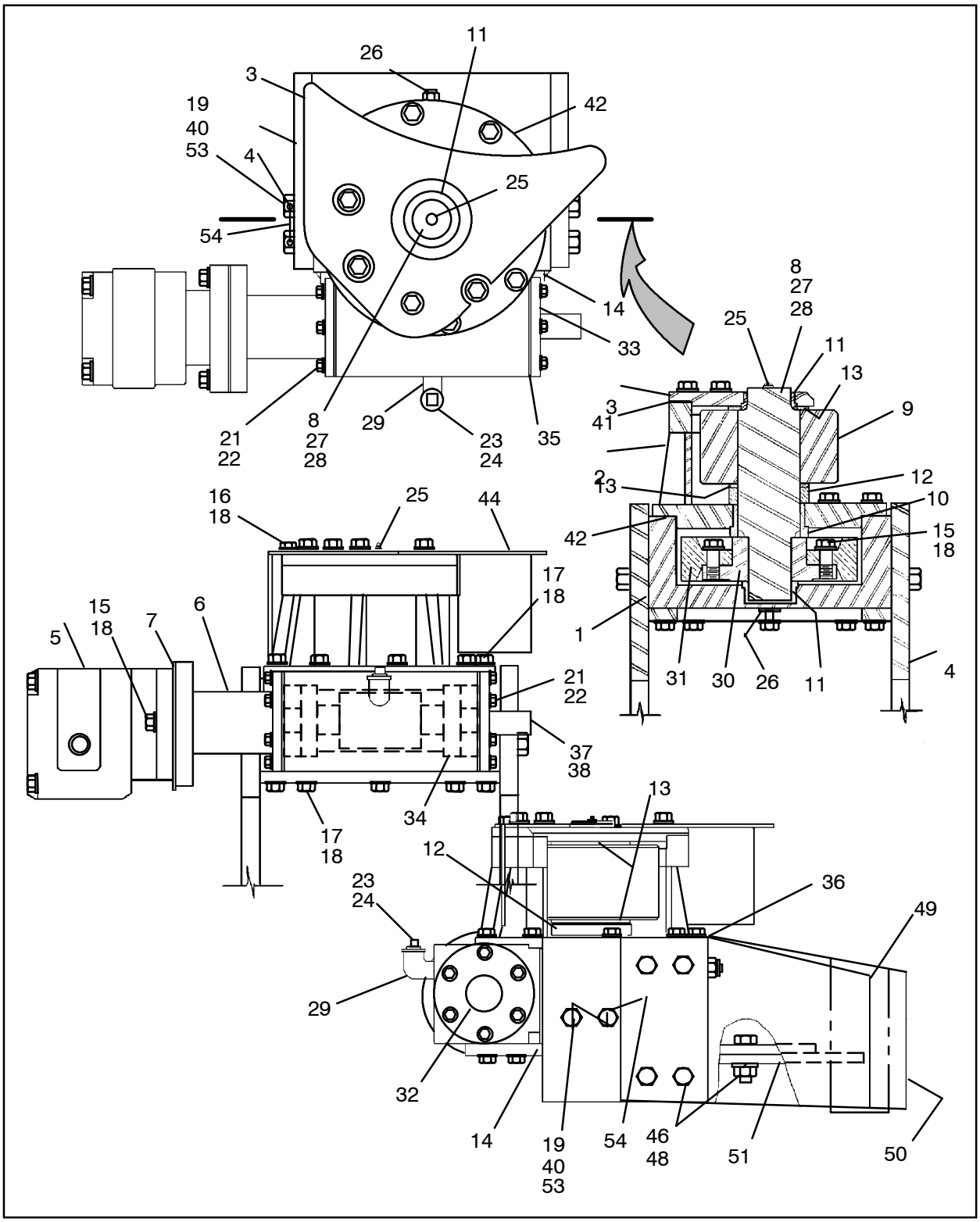

Figure 61 :MOTOR & GEAR REDUCR ASSY*
D57199051 REV 04

57199051 MOTOR & GEAR REDUCR ASSY*

REF.	PART NO.	QTY.	UNIT	DESCRIPTION
001	57054637	1	EA	HOUSING,GEAR
002	57054611	1	EA	COVER
003	57054629	1	EA	COVER,TOP
004	57217531	1	EA	MOUNT, REMOVE 7 ROD *
005	57154916	1	EA	HYD. MOTOR MODIFICATION
006	57267528	1	EA	ADAPTER
007	56953045	1	EA	GASKET
008	57054587	1	EA	SHAFT
009	52193521	1	EA	GEAR,PINION
010	57054603	1	EA	BUSHING
011	57054595	2	EA	BUSHING
012	57068991	1	EA	SPACER
013	95758595	2	EA	BEARING
014	56998164	4	EA	BAR,SQUARE
015	95104162	17	EA	SCREW, CAP-1/2-13 X 1-3/8
016	95104147	5	EA	SCREW, CAP-1/2-13 X 1
017	95044020	4	EA	SCREW CAP
018	95081824	20	EA	WASHER, LOCK-1/2
019	95715942	4	EA	SCREW, CAP-5/8-11 X 1-1/2
021	95935227	12	EA	SCREW, CAP-5/16-18X 1-1/4
022	95934303	12	EA	WASHER, LOCK-5/16 PLATED
023	95043212	1	EA	BUSHING
024	95422663	1	EA	BREATHER
025	95201281	1	EA	FITTING, LUBE
026	95033601	2	EA	PLUG, PIPE-3/8 SQ HEAD
027	57209926	1	EA	KEY
028	95459061	2	EA	KEY
029	95069308	1	EA	ELBOW
030	57210239	1	EA	REWORK HUB
031	57210247	1	EA	REWORK GEAR
032	58227661	1	EA	SEAL,OIL
033	58226655	1	EA	END CAP
034	58194945	2	EA	BEARING,BALL
035	58194960	2	EA	GASKET
036	58192915	1	EA	GASKET
037	58194937	1	EA	GEAR, WORM
038	57074668	1	EA	KEY

57199051 MOTOR & GEAR REDUCR ASSY*

REF.	PART NO.	QTY.	UNIT	DESCRIPTION
039	58209651	1.50	QT	OIL, GEAR
040	95081790	4	EA	WASHER, LOCK–5/8
041	57185902	1	EA	GASKET, SHIM PACK
042	57185894	1	EA	GASKET, SHIM PACK
044	57351694	1	EA	GUARD, GEAR – CAROUSEL
046	95035424	10	EA	SCREW, CAP–5/8UNC X 2
047	95207429	10	EA	NUT,HEX JAM–5/8–11
048	95081790	10	EA	WASHER, LOCK–5/8
049	57216806	1	EA	BRACKET,REMOVABLE GEARBOX
050	57216772	1	EA	BRACKET,REMOVABLE GEARBOX
051	57216814	1	EA	BRACKET,REMOVABLE GEARBOX
053	56784267	1	EA	ADHESIVE
054	50344605	2.00	FT	WIRE, LOCK

WARNING: This manual contains data SPECIFIC to the drilling rig with serial number: 7341.

57199051 MOTOR & GEAR REDUCR ASSY*

This page is blank.

57032880 SPINDLE SUB – 4.5/3.5R – 19”

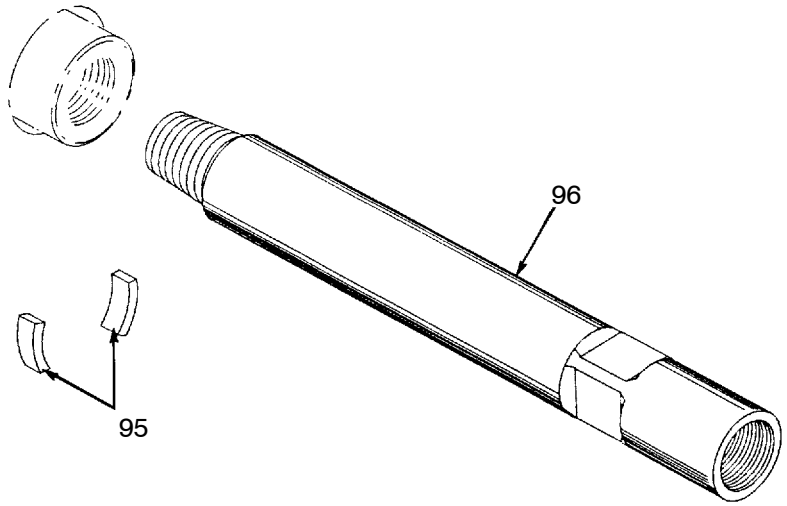

Figure 62 :SPINDLE SUB – 4.5/3.5R – 19”

W50339373 REV18

57032880 SPINDLE SUB – 4.5/3.5R – 19”

REF.	PART NO.	QTY.	UNIT	DESCRIPTION
095	50628007	2	EA	LOCK,SPINDLE
096	57032872	1	EA	ADAPTER, DRILL ROD

57423865 ROD SUPPORT ASSY

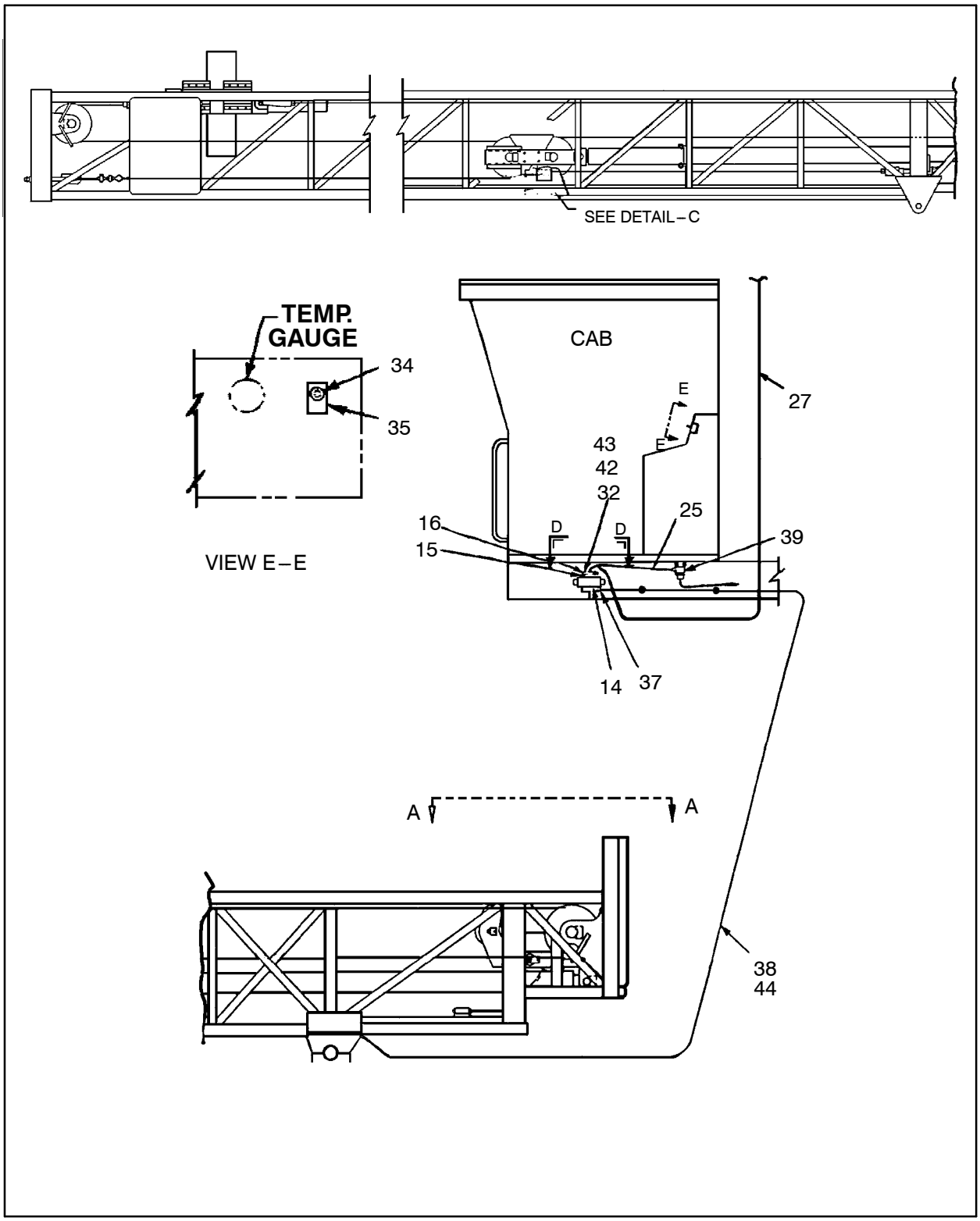

Figure 63 :ROD SUPPORT ASSY
E57423865 REV 00

WARNING: This manual contains data SPECIFIC to the drilling rig with serial number: 7341.

57423865 ROD SUPPORT ASSY

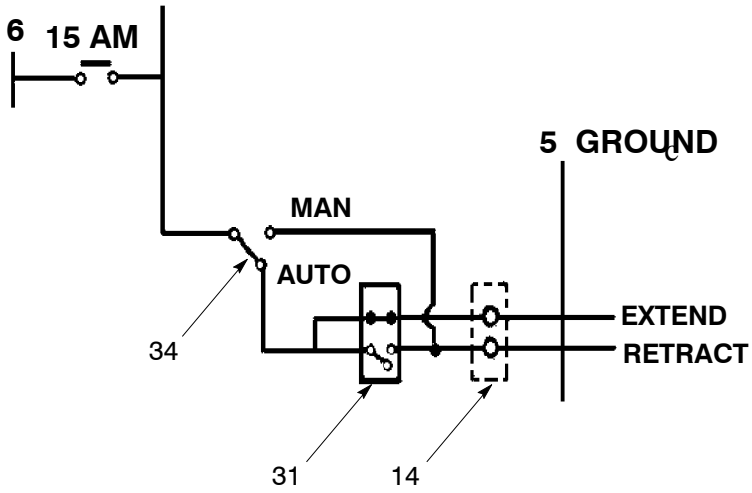

ELECTRICAL SCHEMATIC

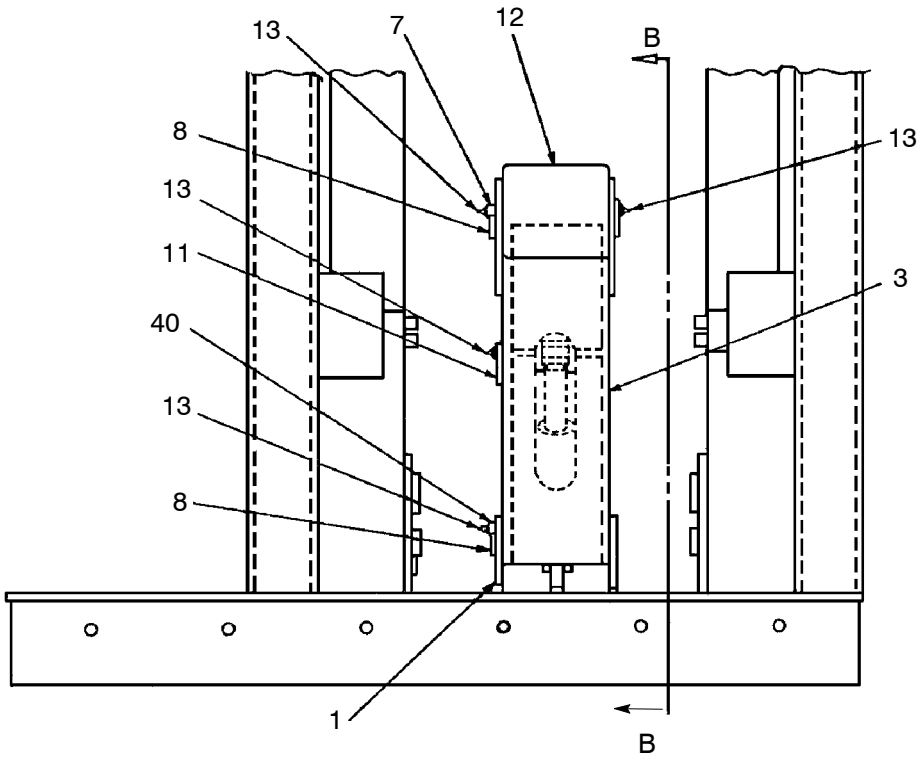

DETAIL A–A

Figure 64 :ROD SUPPORT ASSY
E57423865 REV 00

57423865 ROD SUPPORT ASSY

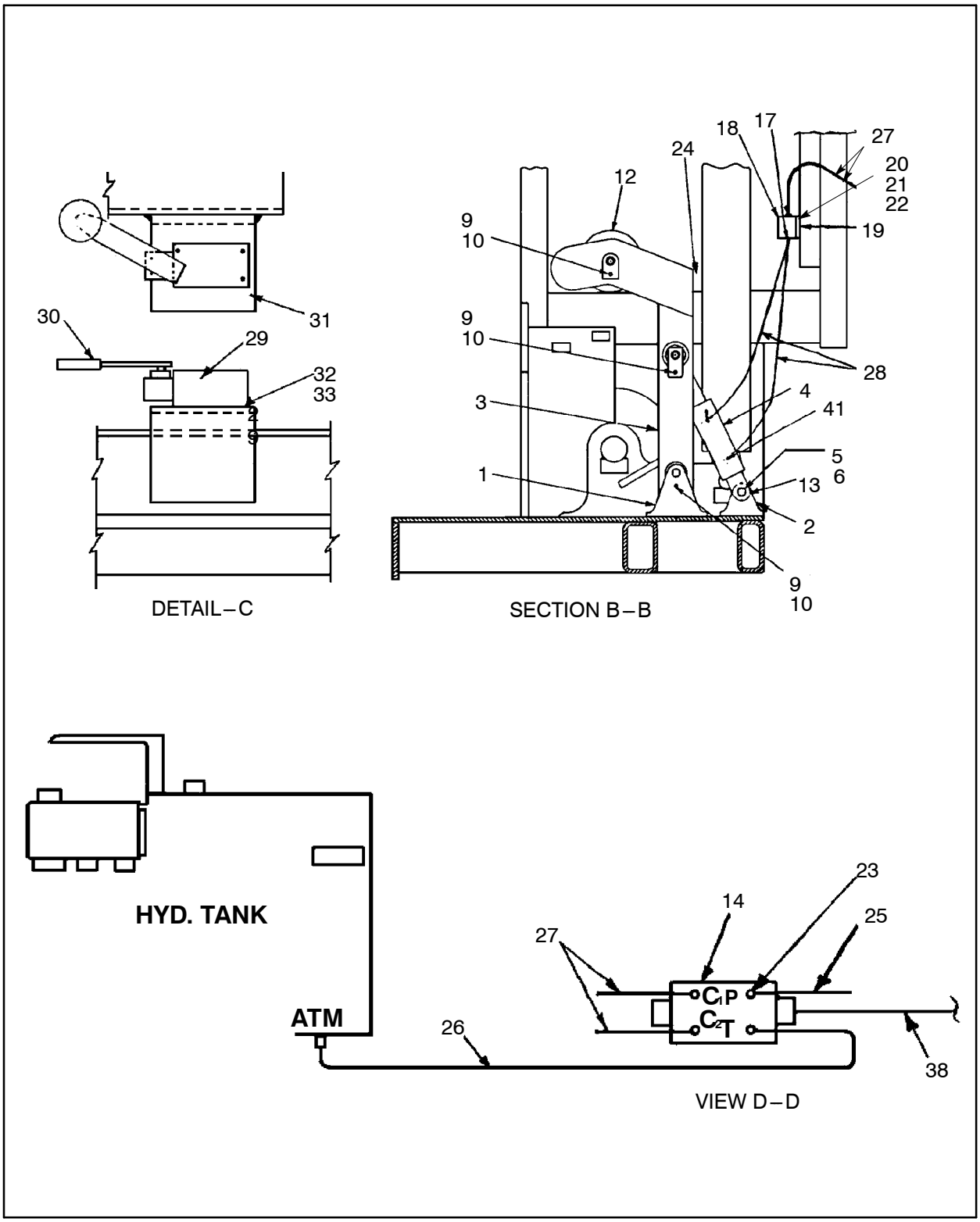

Figure 65 :ROD SUPPORT ASSY
E57423865 REV 00

57423865 ROD SUPPORT ASSY

REF.	PART NO.	QTY.	UNIT	DESCRIPTION	
001	57423790	2	EA	BRKT, ARM MTG – ROD SUPT	
002	57423782	1	EA	BRKT, CYL MTG–ROD SUPT	
003	57423816	1	EA	ARM, ROD SUPPORT	
004	57423808	1	EA	CYLINDER, HYDRAULIC	*(See figure 66)*
005	95342028	1	EA	PIN, HINGE	
006	95093381	2	EA	PIN, COTTER–3/16 X 1–3/4	
007	57273237	1	EA	PIN, PIVOT	
	57273229	1	EA	● - PIN	
	57046831	1	EA	● - RETAINER	
008	57273245	2	EA	RETAINER	
009	95937413	5	EA	WASHER, LOCK–3/8 PLATED	
010	95920674	5	EA	SCREW, CAP–3/8–16 X 1	
011	57423832	1	EA	PIN, LOCKING –CYL.	
012	57423824	1	EA	ROLLER GUIDE, ROD SUPPORT	
013	95201281	6	EA	FITTING, LUBE	
014	57232571	1	EA	VALVE	
	57305377	2	EA	● - COIL, SOLENOID–24VDC	
015	57232589	1	EA	SUBPLATE	
016	57102279	1	EA	BRACKET	
017	95316972	4	EA	FITTING, HYD–NPT/JIC	
018	50462944	1	EA	VALVE, CHECK–DBL PILOT OP	
019	52208691	1	EA	BRACKET, MOUNTING	
020	95943668	2	EA	SCREW, CAP–5/16–18X1–3/4	
021	95934303	2	EA	WASHER, LOCK–5/16 PLATED	
022	95922225	2	EA	WASHER, FLAT–5/16	
023	95356853	4	EA	FITTING, HYD	
024	95279089	1	EA	ELBOW	
025	57290710	1	EA	HOSE ASSY	
026	57239477	1	EA	HOSE ASSY	
027	57015992	2	EA	HOSE ASSY	
028	56950082	2	EA	HOSE ASSY	
029	50518653	1	EA	SWITCH, LIMIT	
030	57194987	1	EA	ARM, ADJUSTABLE	
031	57391641	1	EA	BRACKET, MICRO SWITCH	
032	95934766	6	EA	WASHER, LOCK–1/4 PLATED	
033	95928982	4	EA	SCREW, CAP–1/4–20 X 3/4	
034	57179616	1	EA	SWITCH, TOGGLE	

57423865 ROD SUPPORT ASSY

REF.	PART NO.	QTY.	UNIT	DESCRIPTION
035	57336083	1	EA	NAMEPLT.,ROD SUPP. RETR.
037	52243862	2	EA	CONNECTOR
038	58150103	840.00	IN	WIRE, ELECTRICAL
039	95415667	1	EA	FITTING, HYD
040	57430530	1	EA	PIN,ARM–ROD SUPPORT
041	95219713	1	EA	FITTING, HYD
042	95934857	2	EA	SCREW, CAP–1/4–20 X 1–1/4
043	95931564	2	EA	NUT, HEX–1/4–20
044	95245049	360.00	IN	CONDUIT, FLEX–1/2SEALTITE

WARNING: This manual contains data SPECIFIC to the drilling rig with serial number: 7341.

57423865 ROD SUPPORT ASSY

This page is blank.

57423808 CYLINDER, HYDRAULIC

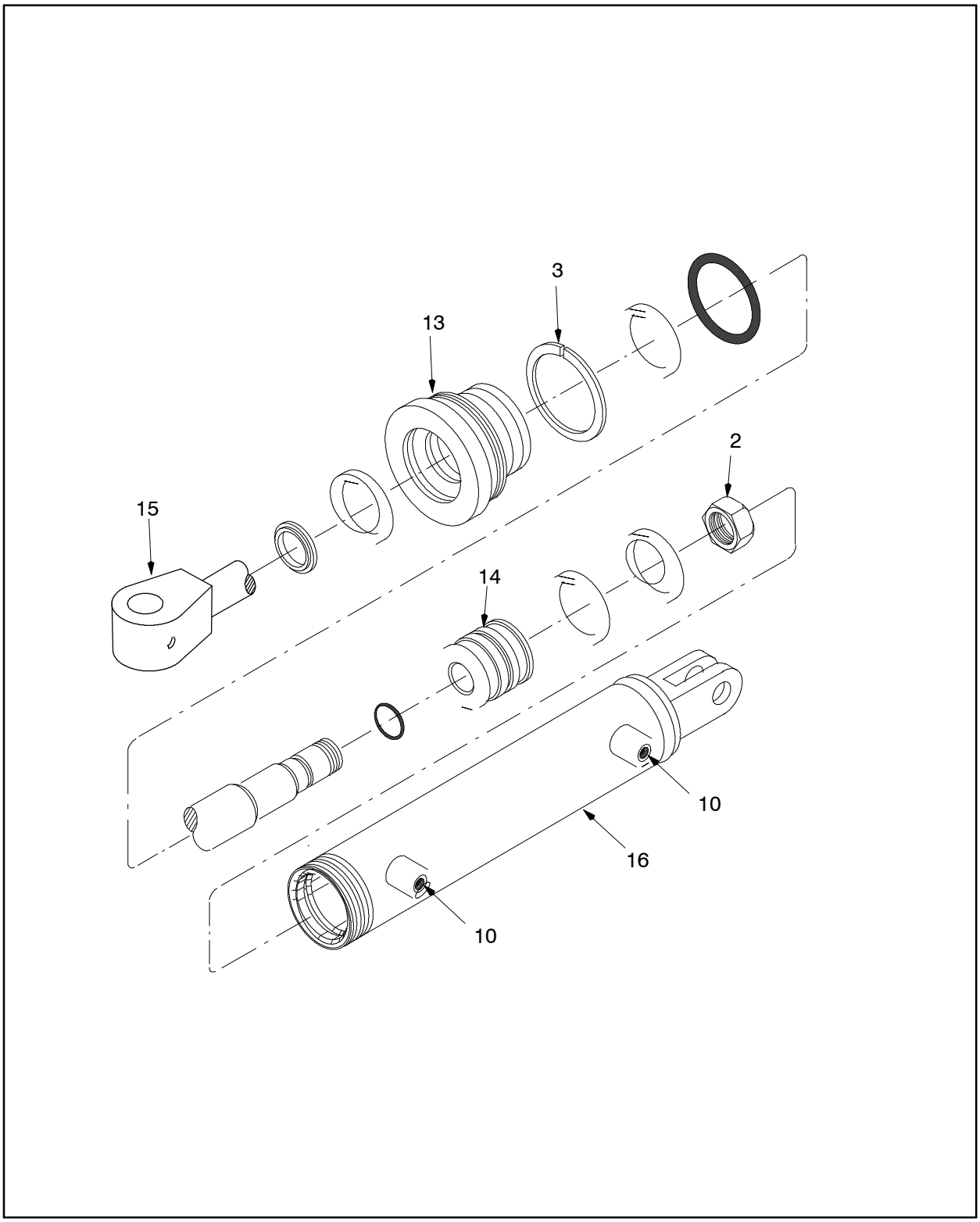

Figure 66 :CYLINDER, HYDRAULIC
D57423808 REV000

WARNING: This manual contains data SPECIFIC to the drilling rig with serial number: 7341.

57423808 CYLINDER, HYDRAULIC

REF.	PART NO.	QTY.	UNIT	DESCRIPTION	
001	57425043	1	EA	SEAL KIT	*(See figure 67)*
002	13084207	1	EA	LOCK–NUT	
003	57068215	1	EA	RING, RETAINING	
010	57401622	2	EA	PLUG–PORT	
011	95531133	1	EA	NUT,HEX JAM–1"–12	
012	57423915	1	EA	PINEYE ASSEMBLY	
013	13084215	1	EA	HEAD	
014	57423931	1	EA	PISTON	
015	57423949	1	EA	ROD	
016	57423956	1	EA	TUBE ASSEMBLY	

57425043 SEAL KIT

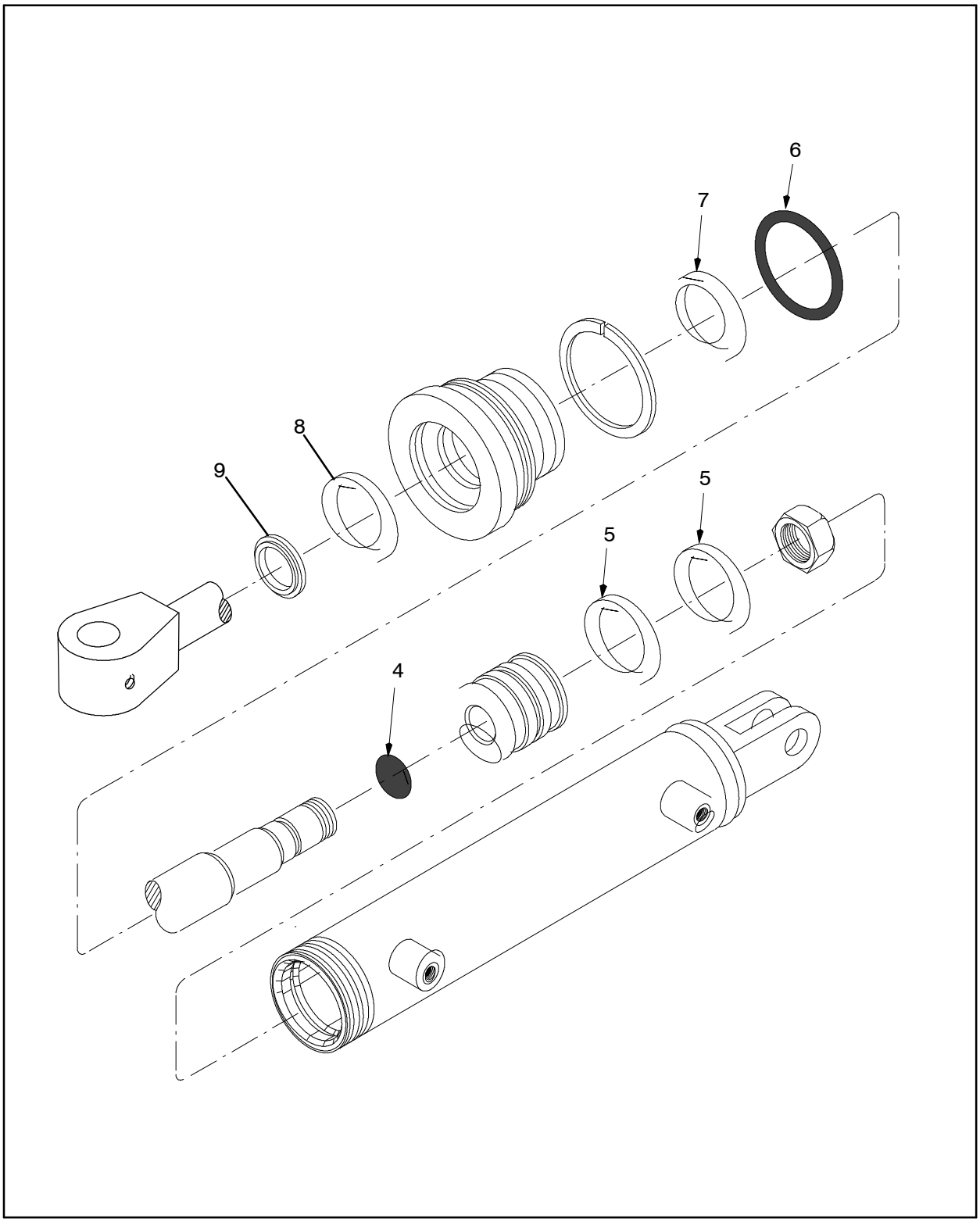

Figure 67 :SEAL KIT
D57423808 REV000

57425043 SEAL KIT

REF.	PART NO.	QTY.	UNIT	DESCRIPTION
004	57362105	1	EA	O-RING
005	57220352	2	EA	U-CUP
006	57220345	1	EA	O-RING
007	57220337	1	EA	SEAL,BACKUP
008	57233652	1	EA	U-CUP
009	57233660	1	EA	WIPER

57523391 BOOM, JIB INSTL–25' TOWER

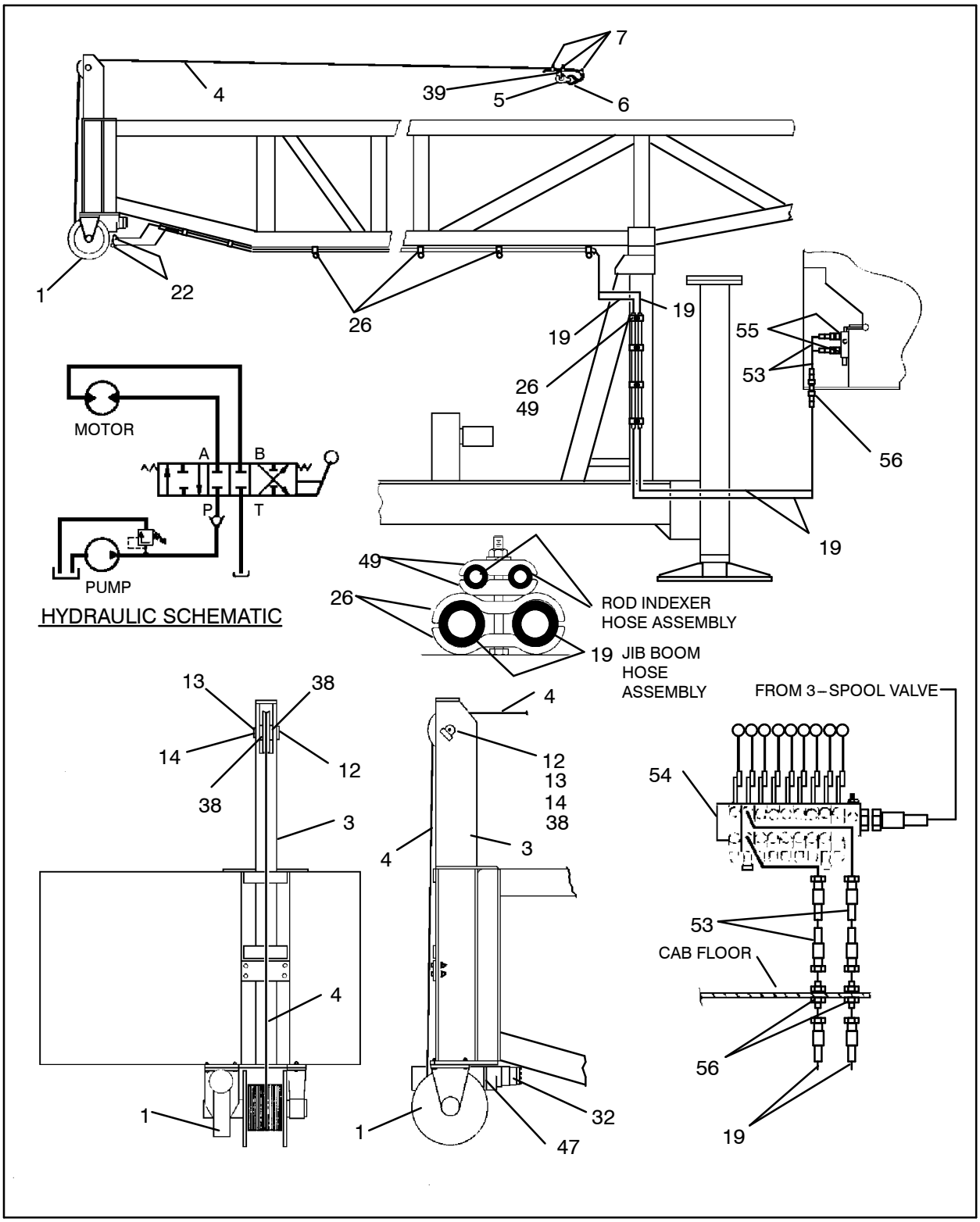

Figure 68 :BOOM, JIB INSTL–25' TOWER
D57383655 REV 02

WARNING: This manual contains data SPECIFIC to the drilling rig with serial number: 7341.

57523391 BOOM, JIB INSTL–25' TOWER

REF.	PART NO.	QTY.	UNIT	DESCRIPTION	
001	52263159	1	EA	HOIST, JIB	*(See figure 69)*
002	57383648	1	EA	MOUNT HOIST	
003	57120271	1	EA	ARM, JIB HOIST–FIXED	
004	58231812	1	EA	ROPE, WIRE–3/8 X 59'	
005	57138950	1	EA	HOOK, SWIVEL–2 TON	
	57138968	1	EA	● - KIT, LATCH	
006	58060153	1	EA	THIMBLE, WIRE ROPE–3/8"	
007	58060179	3	EA	CLAMP, CABLE	
008	95251088	6	EA	SCREW, CAP–7/16–14 X 1.75	
009	95477873	6	EA	NUT, HEX LOCK–7/16–14	
010	50245810	1	EA	SHEAVE, WIRE	
011	57003634	2	EA	BAR, FLAT	
012	95201281	1	EA	FITTING, LUBE	
013	95093381	1	EA	PIN, COTTER–3/16 X 1–3/4	
014	57120339	1	EA	PIN, JIB ARM	
015	50258193	4	EA	PLATE, MOUNTING	
019		2	EA	HOSE	
022	95376141	2	EA	ADAPTER–90DEG,ORING/JIC	
023	95103818	11	EA	SUB 95935128–CAPSCREW,HEX	
024	95937413	11	EA	WASHER, LOCK–3/8 PLATED	
025	95922894	11	EA	NUT, HEX–3/8–16	
026	50034818	20	EA	CLAMP, HALF	
026	50034818	2	EA	CLAMP, HALF	
027	95104188	4	EA	SCREW, CAP–1/2–13 X 1–3/4	
028	95321204	4	EA	NUT, HEX JAM–1/2–13	
029	95245767	4	EA	WASHER, BEVEL–1/2	
030	95081667	8	EA	WASHER, FLAT–1/2	
032	50820935	1	EA	MOTOR, HYDRAULIC	*(See figure 70)*
038	57120347	2	EA	SPACER	
039	57146474	1	EA	SLING LINK	
047	56953045	1	EA	GASKET	
053	57040784	2	EA	HOSE ASSY	
055	95364949	2	EA	FITTING, HYD	
056	95332599	2	EA	ADAPTER	

52263159 HOIST, JIB

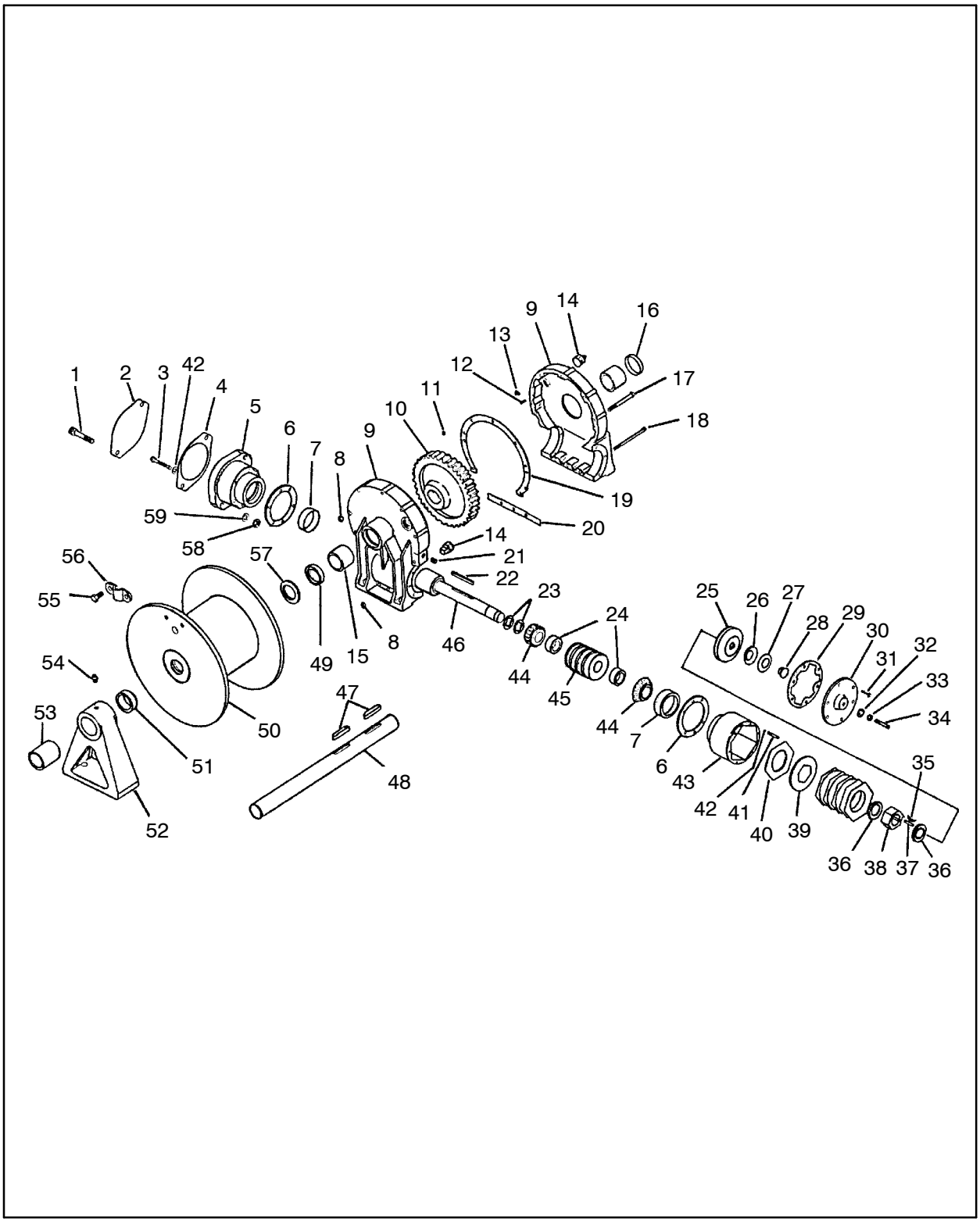

Figure 69 :HOIST, JIB
E52263159 REV01

WARNING: This manual contains data SPECIFIC to the drilling rig with serial number: 7341.

52263159 HOIST, JIB

REF.	PART NO.	QTY.	UNIT	DESCRIPTION
001	58232554	2	EA	SCREW
002	58232562	1	EA	COVER
003	52140480	6	EA	CPSCRW/LCWSH
004	50830546	1	EA	GASKET
005	50710532	1	EA	ADAPTER
006	52260734	4	EA	GASKET
007	50710508	2	EA	BEARING CUP
009	52240090	2	EA	HOUSING, HALF
010	52259769	1	EA	GEAR/SPIDER
011	58232588	1	EA	SCREW
012	50830660	2	EA	DOWEL PIN
013	58232596	2	EA	VALVE,RELIEF
014	52140464	1	EA	GREASE PLUG
015	58232604	2	EA	BUSHING
016	58232612	1	EA	PLUG
017	52140423	7	EA	B0LT-NUT
018	58232620	3	EA	SCREW
019	52240132	1	EA	GASKET
020	52240140	1	EA	GASKET
021	58232638	2	EA	PLUG
022	50830413	1	EA	WORM KEY
023	50650407	2	EA	RING, LOCK
024	52269883	2	EA	SPACER
025	57241739	1	EA	SPRING
026	57241747	1	EA	PRESSURE PLATE-CLUTCH
029	50636513	1	EA	GASKET
030	57419020	1	EA	COVER, BRAKE HOUSING
031	52252053	6	EA	SCREW
032	58232661	1	EA	SEAL
033	58232679	1	EA	NUT
034	58232687	1	EA	SCREW
035	50650456	12	EA	SPRING
036	50650415	2	EA	WASHER
037	50650449	6	EA	ROLL PIN
038	57241721	1	EA	CLUTCH
039	50650381	4	EA	PLATE, BRASS
040	50650399	5	EA	PLATE

52263159 HOIST, JIB

REF.	PART NO.	QTY.	UNIT	DESCRIPTION
041	50647767	6	EA	CPSCRW/LCWSH
042	58232695	12	EA	WASHER
043	57419012	1	EA	HOUSING, BRAKE
044	50710490	2	EA	BEARING CONE
045	50830520	1	EA	WORM
046	50830538	1	EA	WORMSHAFT
047	50830421	4	EA	SPIDER KEY
048	58232703	1	EA	SHAFT
049	52218500	1	EA	SEAL
050	58232711	1	EA	DRUM
052	58232737	1	EA	BRACKET
053	50830397	1	EA	BUSHING
054	50830553	1	EA	ZERK FITTING
055	52140431	2	EA	BOLT
056	50830587	1	EA	CABLE CLAMP
057	58232745	8	EA	WASHER
058	58232752	2	EA	NUT
059	58232760	2	EA	WASHER
061	57308009	1	EA	SEAL, BRAKE

WARNING: This manual contains data SPECIFIC to the drilling rig with serial number: 7341.

52263159 HOIST, JIB

This page is blank.

50820935 MOTOR, HYDRAULIC

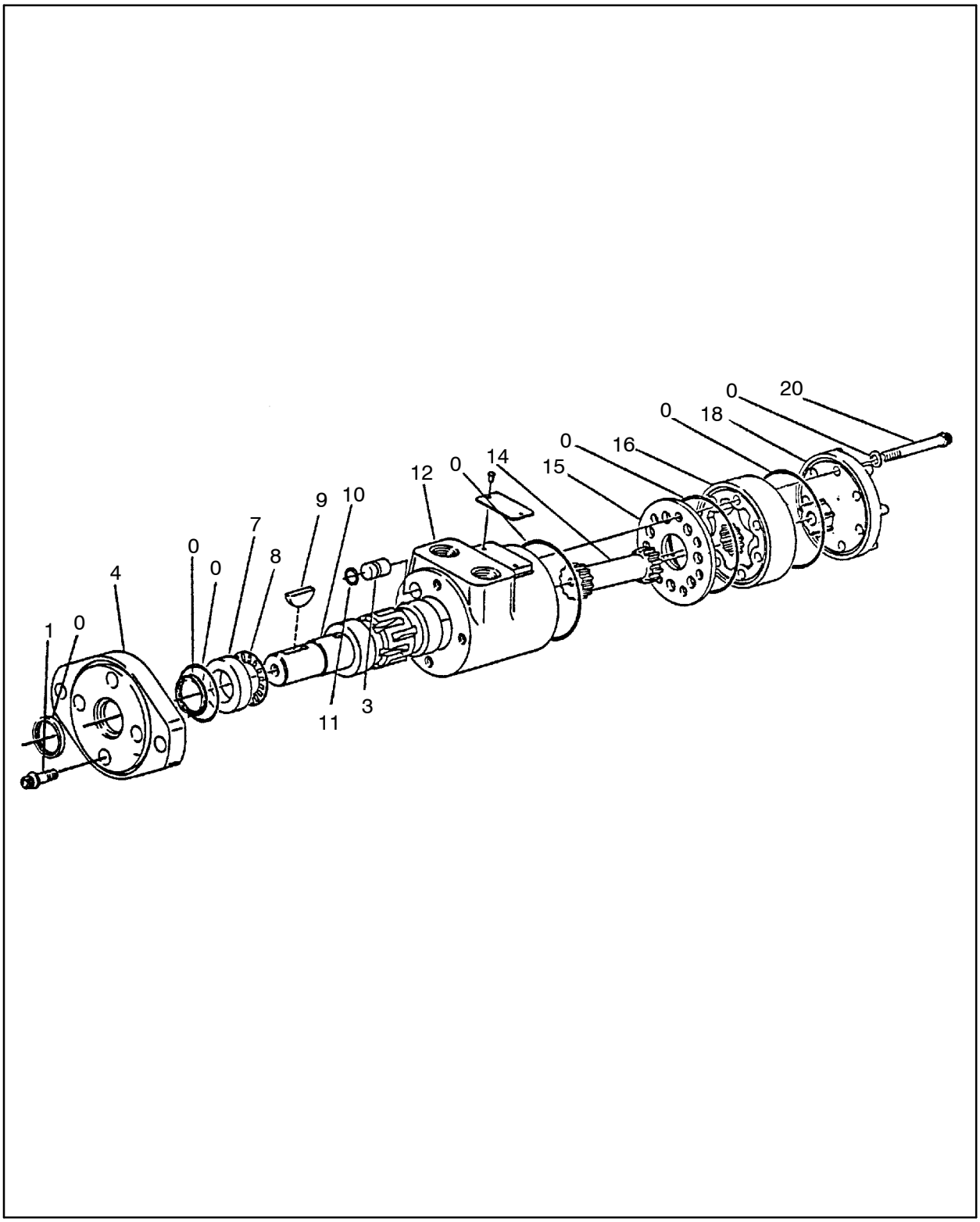

Figure 70 :MOTOR, HYDRAULIC
Y352128 REV00

50820935 MOTOR, HYDRAULIC

REF.	PART NO.	QTY.	UNIT	DESCRIPTION
000	52188976	1	EA	SEAL KIT
001	50491729	4	EA	SCREW, CAP–5/16 X 7/8
003	50998103	1	EA	PLUG
004	52188851	1	EA	FLANGE, MOUNTING
007	52188885	1	EA	RACE, BEARING
008	56001118	1	EA	BEARING, MOTOR
009	52188893	1	EA	KEY,WOODRUFF
010	52188901	1	EA	SHAFT, OUTPUT
011	50636547	1	EA	O–RING
012	52188927	1	EA	HOUSING, 1/2 NPT PORTS
014	52188935	1	EA	DRIVE SHAFT
015	52188943	1	EA	SPACER PLATE
016	52188950	1	EA	GEROTOR SET
018	52188968	1	EA	CAP, END
020	50799170	7	EA	SCREW, CAP–5/16 X 1–1/2

57523466 TOWER ASSY, 25FT

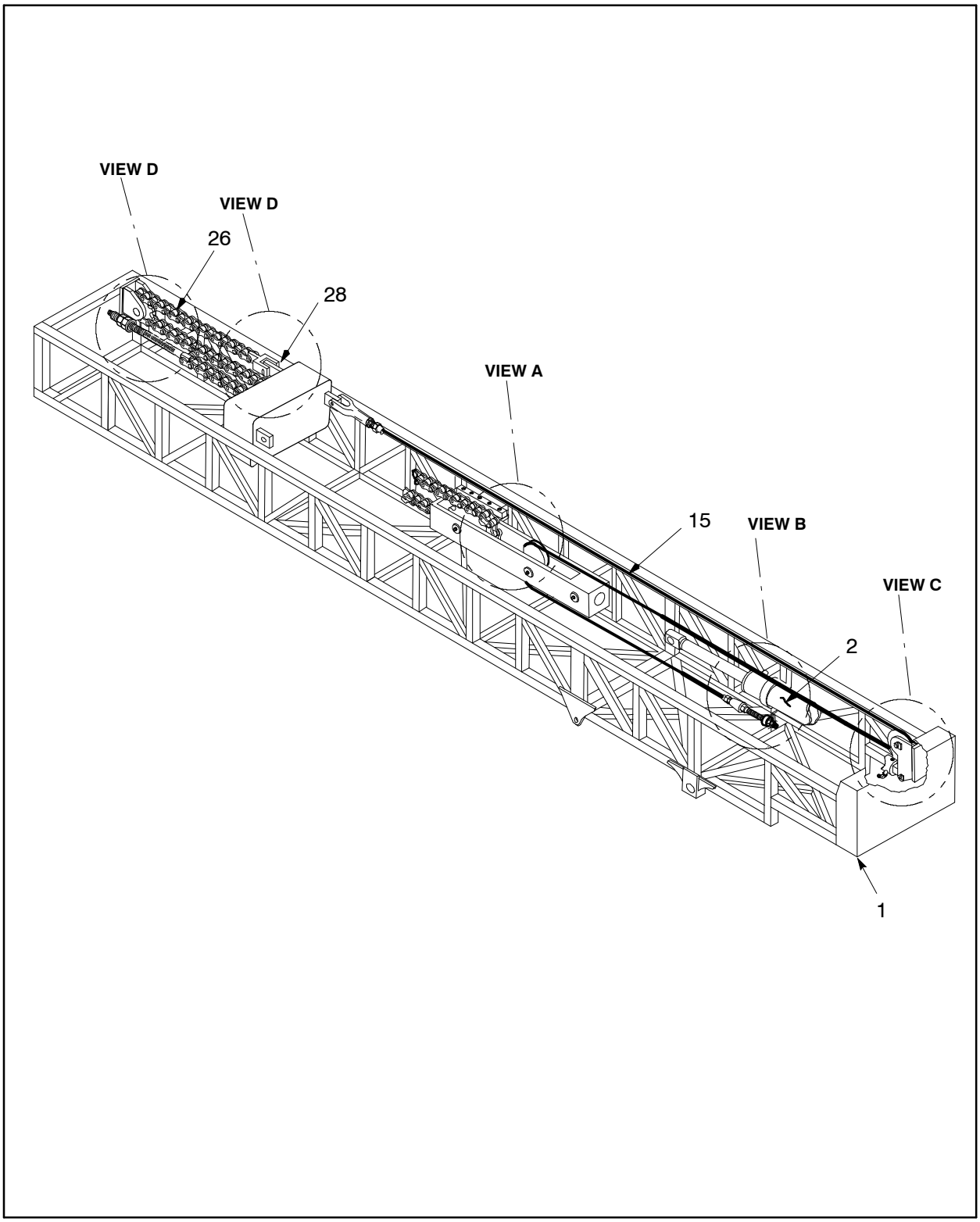

Figure 71 :TOWER ASSY, 25FT
E57423055 REV 000

WARNING: This manual contains data SPECIFIC to the drilling rig with serial number: 7341.

57523466 TOWER ASSY, 25FT

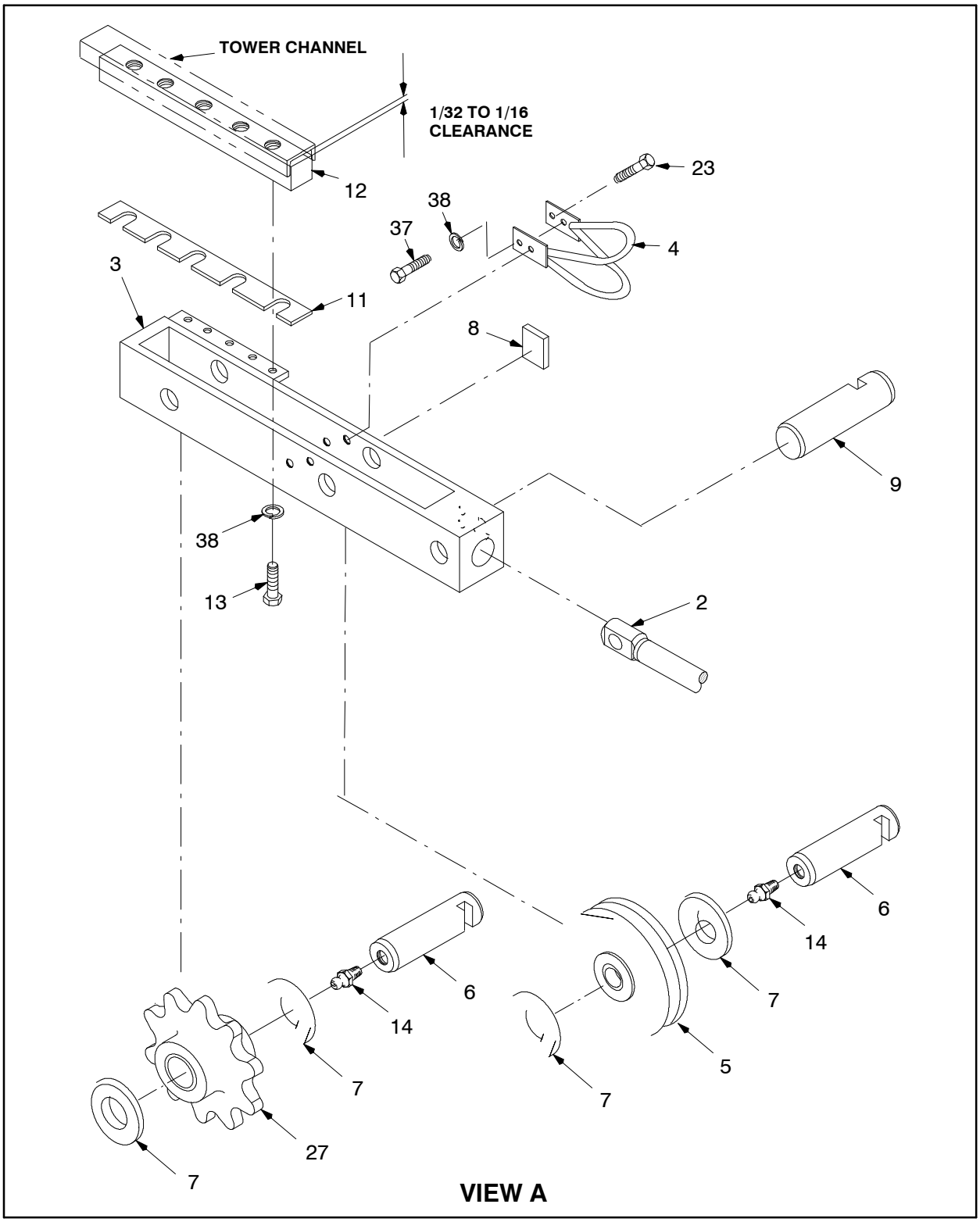

Figure 72 :TOWER ASSY, 25FT
E57423055 REV 000

57523466 TOWER ASSY, 25FT

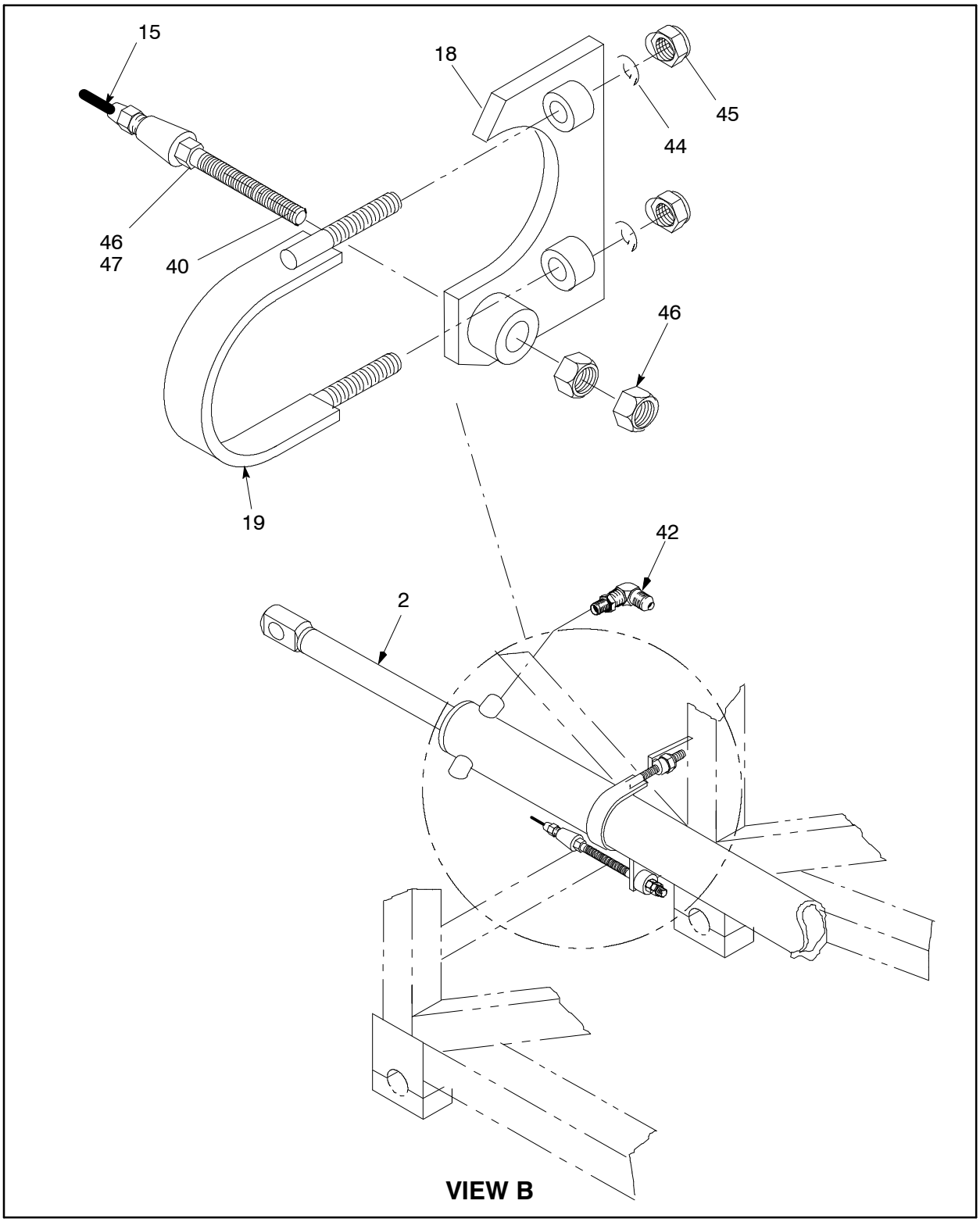

Figure 73 :TOWER ASSY, 25FT
E57423055 REV 000

WARNING: This manual contains data SPECIFIC to the drilling rig with serial number: 7341.

57523466 TOWER ASSY, 25FT

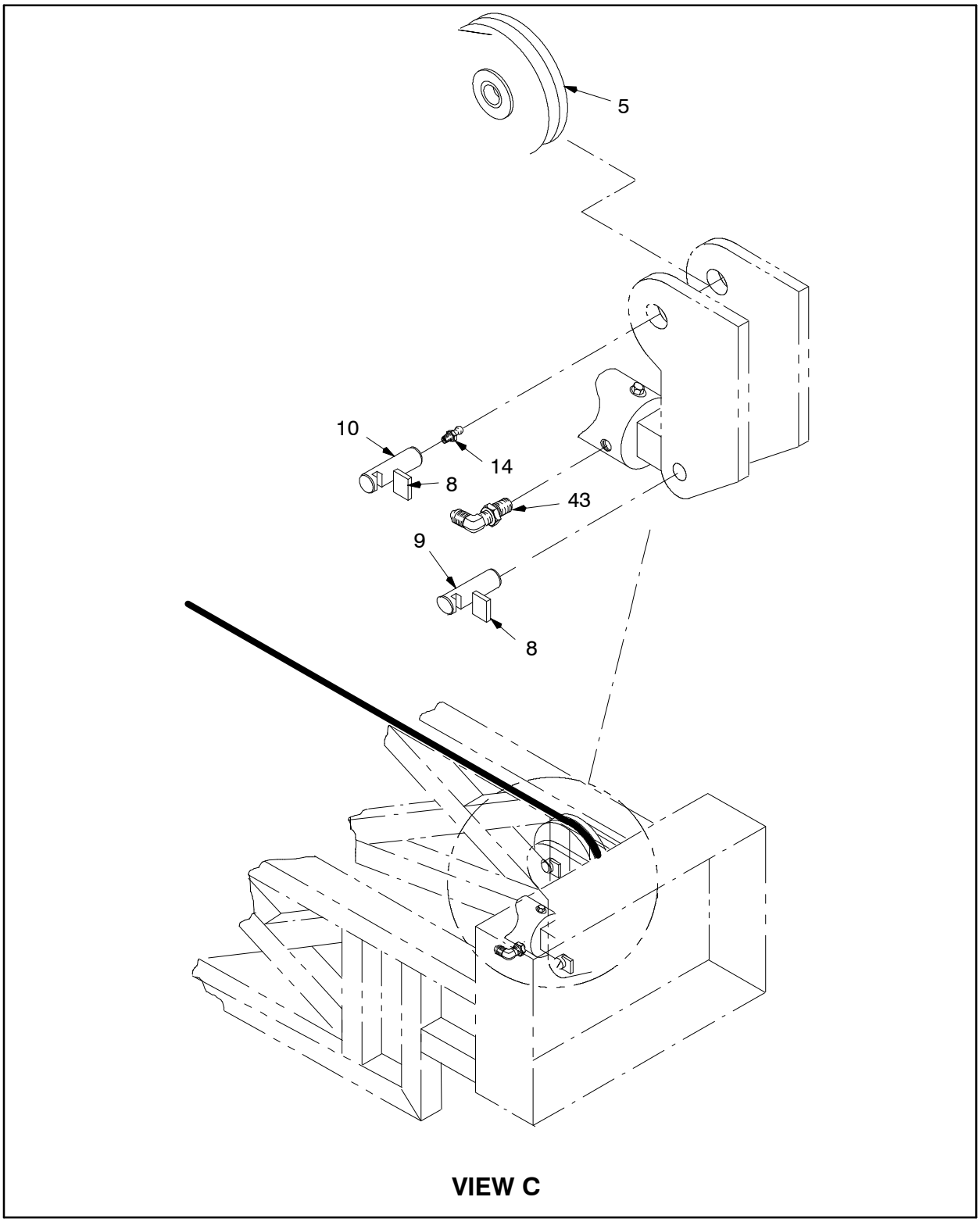

Figure 74 :TOWER ASSY, 25FT
E57423055 REV 000

57523466 TOWER ASSY, 25FT

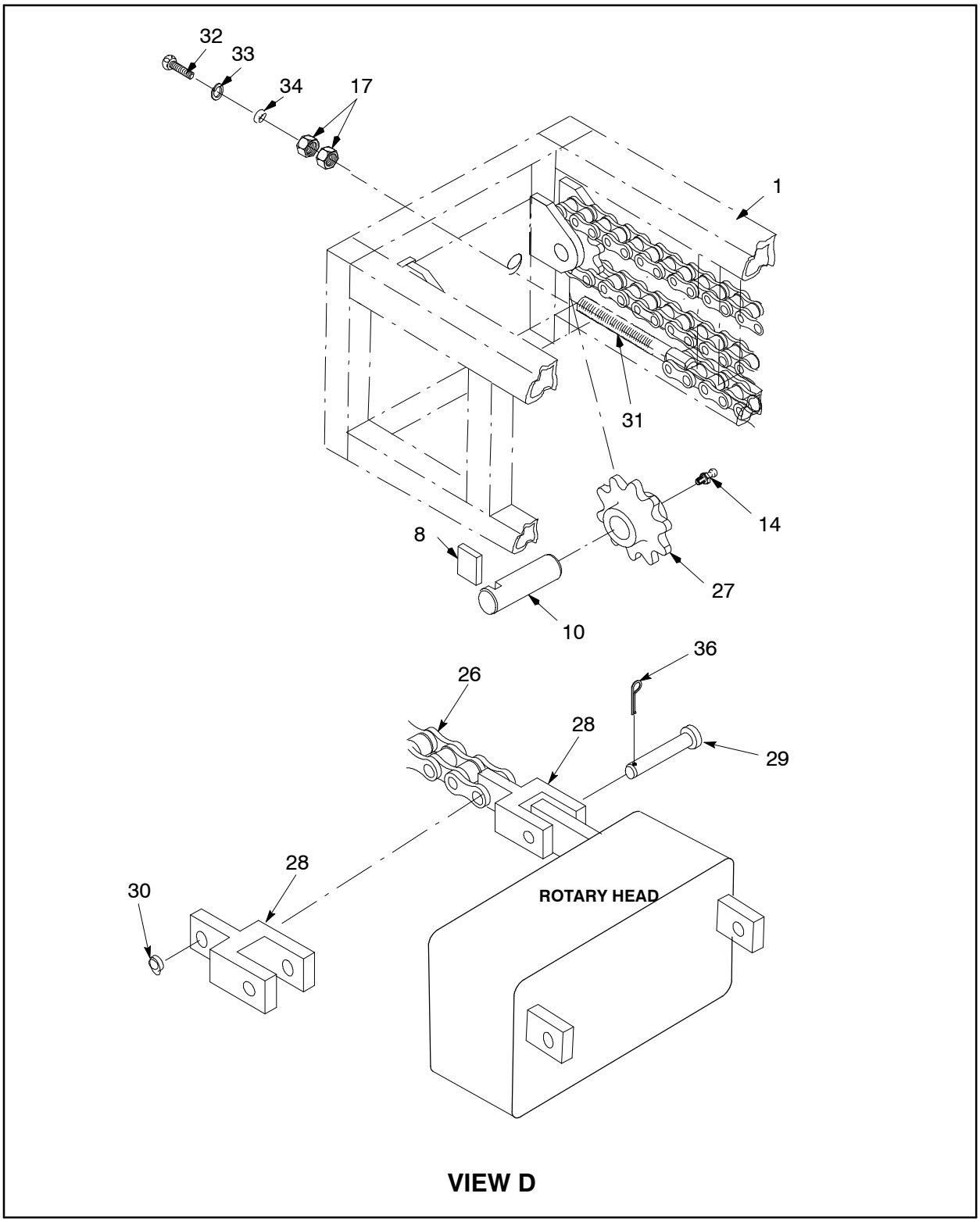

Figure 75 :TOWER ASSY, 25FT
E57423055 REV 000

WARNING: This manual contains data SPECIFIC to the drilling rig with serial number: 7341.

57523466 TOWER ASSY, 25FT

REF.	PART NO.	QTY.	UNIT	DESCRIPTION
001	57525420	1	EA	WELDMENT,TOWER–25FT,STD
	57423006	1	EA	● - BLOCK–PIVOT ASSY–R.H. *(See figure 76)*
	57423014	1	EA	● - BLOCK–PIVOT ASSY–L.H *(See figure 77)*
002	57492563	2	EA	CYLINDER, HYDRAULIC
003	57414641	2	EA	GUIDE, SHEAVE/SPRKT
004	57410599	4	EA	RETAINER, CABLE
005	52228848	4	AS	SHEAVE W/BUSH–1 ROPE
	57432700	1	EA	● - SHEAVE,MACHINED–1 ROPE
	50412626	1	EA	● - BUSHING
006	50338987	4	EA	PIN, SPROCKET
007	50334457	8	EA	WASHER, THRU
008	50339019	12	EA	PLATE, LOCKING
009	50339001	4	EA	PIN, CYLINDER
010	52227337	4	EA	PIN, SPROCKET
011	50339027	4	EA	SHIM, GUIDE
012	52147543	4	EA	BLOCK, GUIDE
013	95157731	20	EA	SCREW, CAP–1/2 X 1.5
014	95201281	8	EA	FITTING, LUBE
015	57523508	2	EA	CABLE ASSY, FOR 25' TOWER
017	95077723	4	EA	NUT, HEX–1–1/2–6
018	57315798	2	EA	SUPPORT, FEED CYL–5 OD
019	57315780	2	EA	CLAMP, FEED CYL–5 OD
022	57397325	2	EA	PLATE, MTG –IR LOGO
023	95233532	8	EA	SCREW, CAP–1/2–13 X 1
026	57531691	2	EA	CHAIN,ROLLER–25FT TWR
027	57407173	4	EA	SPROCKET W/BUSH–20T
	57407009	1	EA	● - SPROCKET, 2"P. 20 TEETH
	50412626	1	EA	● - BUSHING
028	57407017	2	EA	ADAPTER, CHAIN
029	57407181	2	EA	PIN, ADAPTER CHAIN
030	50702927	2	EA	BUSHING, CHAIN ANCHOR
031	50339043	2	EA	BOLT, CHAIN
032	95104394	2	EA	SCREW, CAP–5/8–11 X 1
033	95081790	2	EA	WASHER, LOCK–5/8
034	95094314	2	EA	WASHER, FLAT–5/8
036	95210852	2	EA	PIN, COTTER–3/16 X 2–1/2
037	95104188	8	EA	SCREW, CAP–1/2–13 X 1–3/4

57523466 TOWER ASSY, 25FT

REF.	PART NO.	QTY.	UNIT	DESCRIPTION
038	95081824	28	EA	WASHER, LOCK–1/2
040	95246062	2	EA	PIN, ROLL–3/8 X 3–3/4
041	57446270	2	EA	BRACKET, CABLE GUIDE
042	57167934	2	EA	FITTING, L90–120FS X12SAE
043	57296394	2	EA	FITTING, L90–160FS X12SAE
044	95069571	4	EA	WASHER, FLAT–3/4
045	95080214	4	EA	SUB 95077319 HEX NUT
046	95085957	6	EA	NUT,HEX JAM–1–1/2–6
047	95238119	2	EA	WASHER,LOCK–1–1/2

WARNING: This manual contains data SPECIFIC to the drilling rig with serial number: 7341.

57523466 TOWER ASSY, 25FT

This page is blank.

57423006 BLOCK – PIVOT ASSY – R.H.

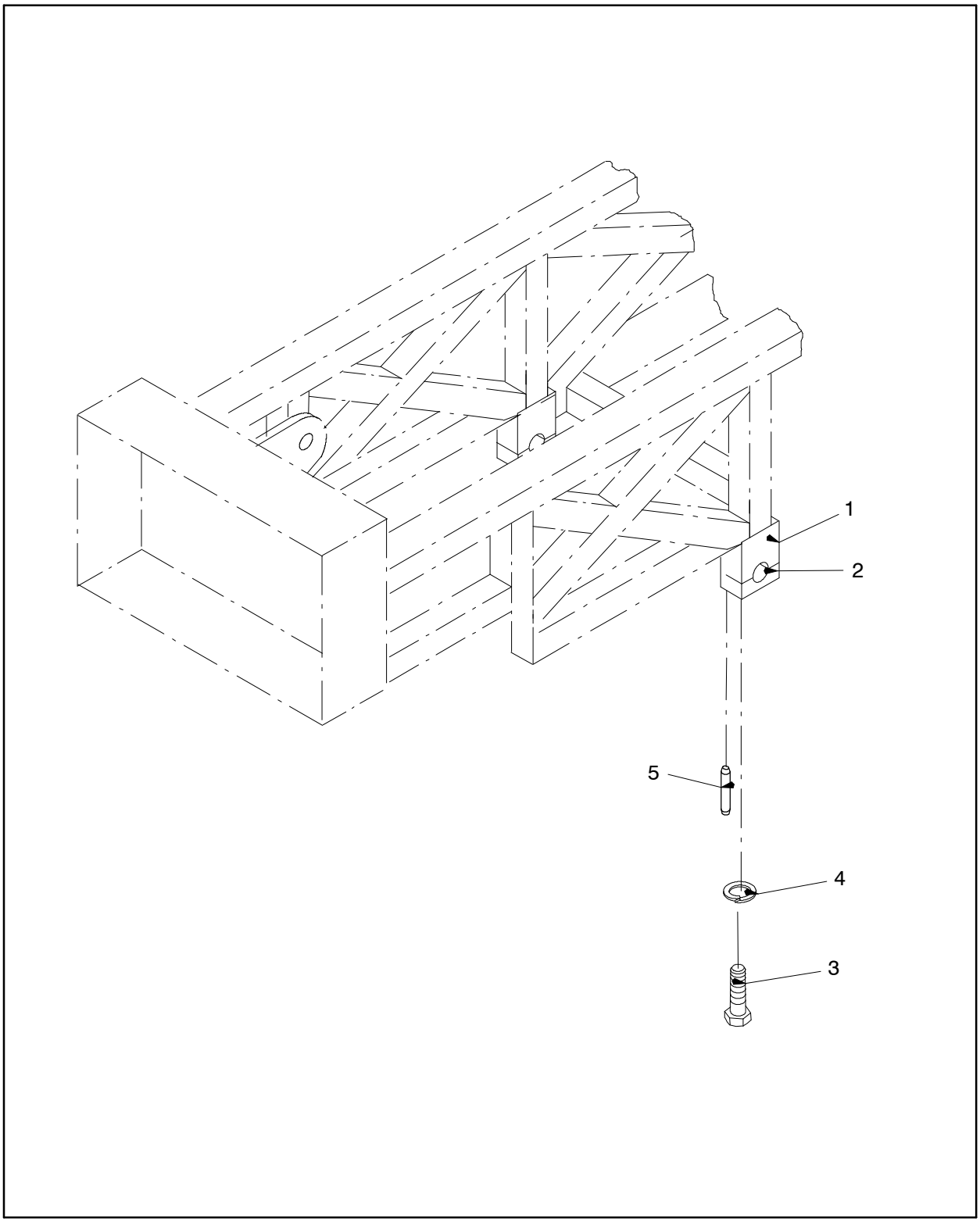

Figure 76 :BLOCK – PIVOT ASSY – R.H.
D57423006 REV000

WARNING: This manual contains data SPECIFIC to the drilling rig with serial number: 7341.

57423006 BLOCK–PIVOT ASSY–R.H.

REF.	PART NO.	QTY.	UNIT	DESCRIPTION
001	57422982	1	EA	BLOCK–PIVOT–UPPER R.H.
002	57422974	1	EA	BLOCK–PIVOT–LOWER
003	95487161	4	EA	SCREW,CAP
004	95228169	4	EA	WASHER, LOCK–1”
005	95034005	1	EA	PIN,ROLL

57423014 BLOCK–PIVOT ASSY–L.H

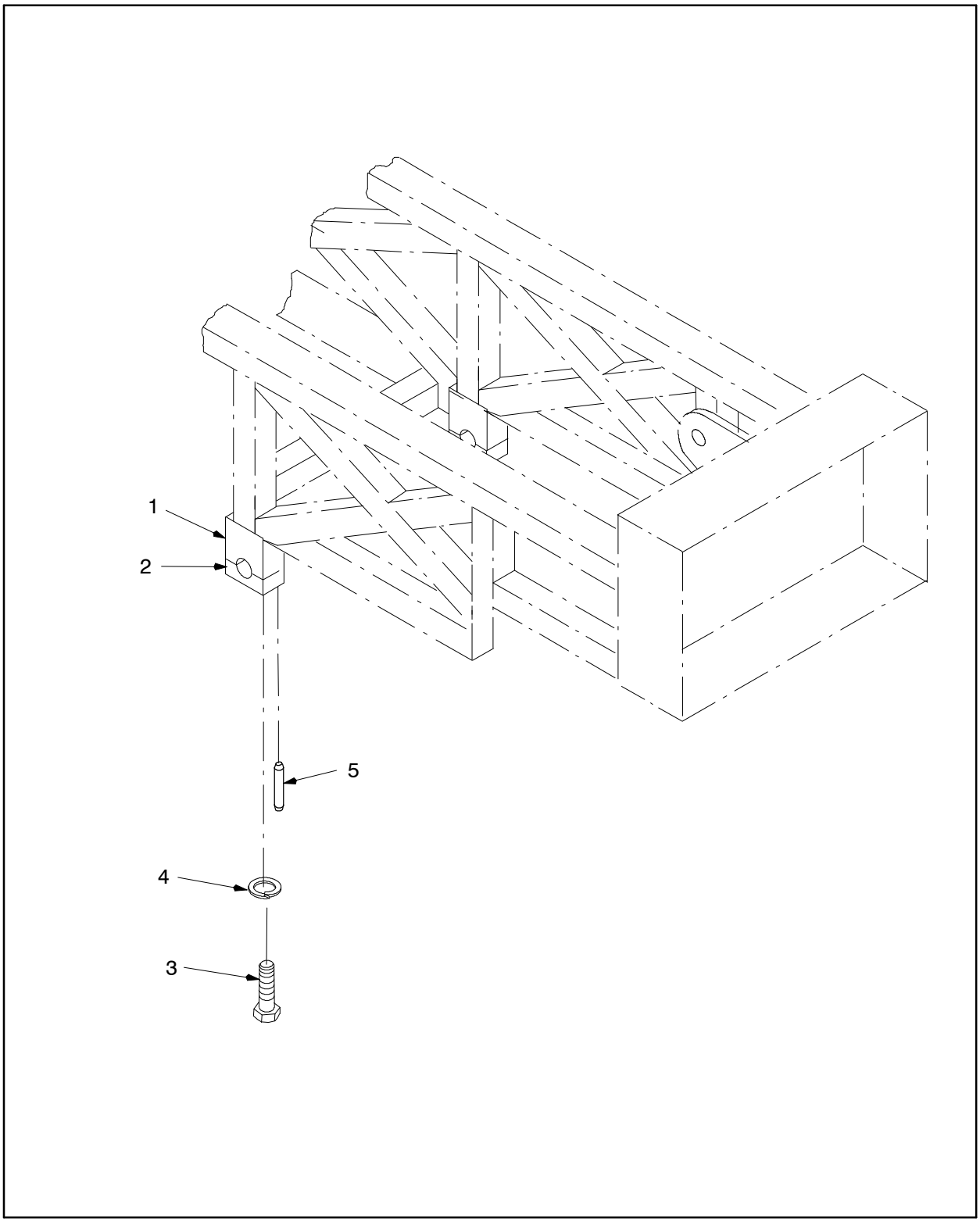

Figure 77 :BLOCK–PIVOT ASSY–L.H
D57423014 REV000

WARNING: This manual contains data SPECIFIC to the drilling rig with serial number: 7341.

57423014 BLOCK–PIVOT ASSY–L.H

REF.	PART NO.	QTY.	UNIT	DESCRIPTION
001	57422990	1	EA	BLOCK–PIVOT–UPPER L.H.
002	57422974	1	EA	BLOCK–PIVOT–LOWER
003	95487161	4	EA	SCREW,CAP
004	95228169	4	EA	WASHER, LOCK–1”
005	95034005	1	EA	PIN,ROLL

57452401 ENGINE ASSY, QSK19−600

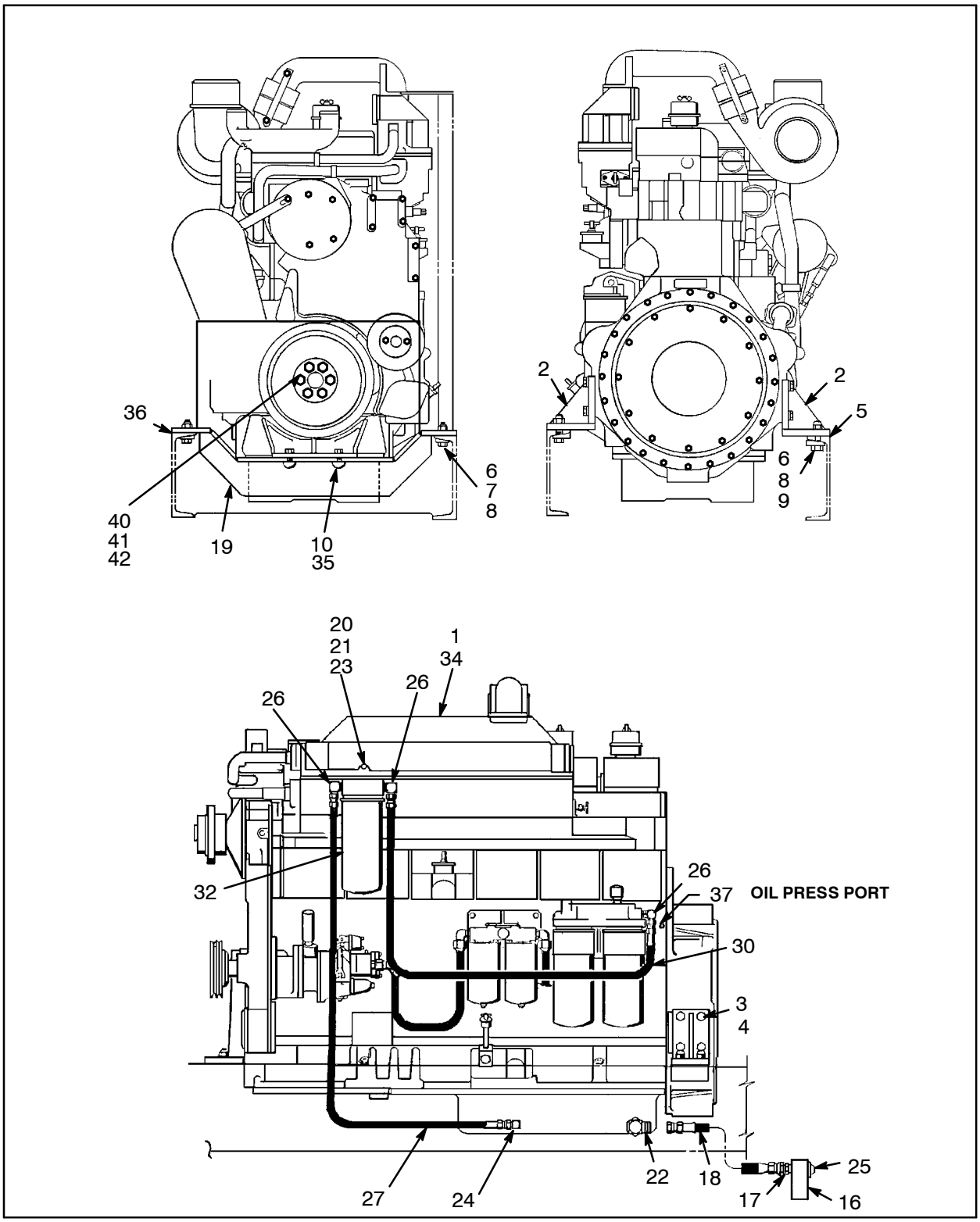

Figure 78 :ENGINE ASSY, QSK19−600
E57488829 REV 04

57452401 ENGINE ASSY, QSK19−600

REF.	PART NO.	QTY.	UNIT	DESCRIPTION	
001	57421380	1	EA	ENG.BARE QSK19−600 1START	
	57165763	1	EA	● ELEMENT, FILTER−OIL	
	57479123	1	EA	● FILTER, FUEL−QSK19	
	57232027	1	EA	● FILTER, ORIGINAL COOLANT	
	57499162	1	EA	● FILTER, SERVICE COOLANT	
	57499170	1.00	GL	● ADDITIVE, SERVICE COOLANT	
	57354789	2	EA	● BELT,V,ALTERNATOR DRIVE	
	57497117	1	AS	● KIT,WIRING QSK DECELERATE	
002	56981657	2	EA	MOUNT, ENGINE	
003	95373585	8	EA	SCREW, CAP−5/8−11X1.75	
004	95081790	8	EA	WASHER, LOCK−5/8	
005	56939028	4	EA	SHIM, PAK	
006	95104451	6	EA	SCREW, CAP−5/8−11 X 2−3/4	
007	95266409	2	EA	WASHER, BEVEL−5/8	
008	95080206	6	EA	NUT, HEX LOCK−5/8−11	
009	50692243	2	EA	WASHER, BAR	
010	95104642	2	EA	SCREW, CAP−3/4−10 X 1−3/4	
016	52235363	1	EA	BRACKET, OIL	
017	95219747	1	EA	FITTING, HYD	
018	56954233	1	EA	HOSE ASSY	
019	57472433	1	EA	ENGINE SUPPORT	
020	95103800	3	EA	SUB 95958989−CAPSCREW,HEX	
021	95922894	3	EA	NUT, HEX−3/8−16	
022	95280186	1	EA	FITTING, HYD	
023	95937413	3	EA	WASHER, LOCK−3/8 PLATED	
024	95279535	1	EA	FITTING, HYD	
025	95002143	1	EA	PLUG, PIPE−SQ HEAD, 3/4	
026	95279501	3	EA	FITTING	
027	57004046	1	EA	HOSE ASSY	
029	57479180	1	AS	WIRING, ENG. QSK19−600	*(See figure 79)*
030	56954183	1	EA	HOSE ASSY	
034	52223831	13.00	GL	OIL, MOTOR	
035	95081808	2	EA	WASHER, LOCK−3/4	
036	50518083	4	EA	SHIM SET	
037	95287629	1	EA	FITTING, HYD	
040	57368524	1	EA	DRIVE SHAFT	
	57113656	0	EA	●- U−JOINT KIT	
041	95215257	8	EA	SCREW, CAP−1/2−20 X 1−1/4	

57452401 ENGINE ASSY, QSK19−600

REF.	PART NO.	QTY.	UNIT	DESCRIPTION
042	95081824	12	EA	WASHER, LOCK−1/2
043	95077798	4	EA	NUT, HEX−1/2−13
044	95245767	4	EA	WASHER, BEVEL−1/2
045	95104188	4	EA	SCREW, CAP−1/2−13 X 1−3/4

WARNING: This manual contains data SPECIFIC to the drilling rig with serial number: 7341.

57452401 ENGINE ASSY, QSK19−600

This page is blank.

57479180 WIRING, ENG. QSK19−600

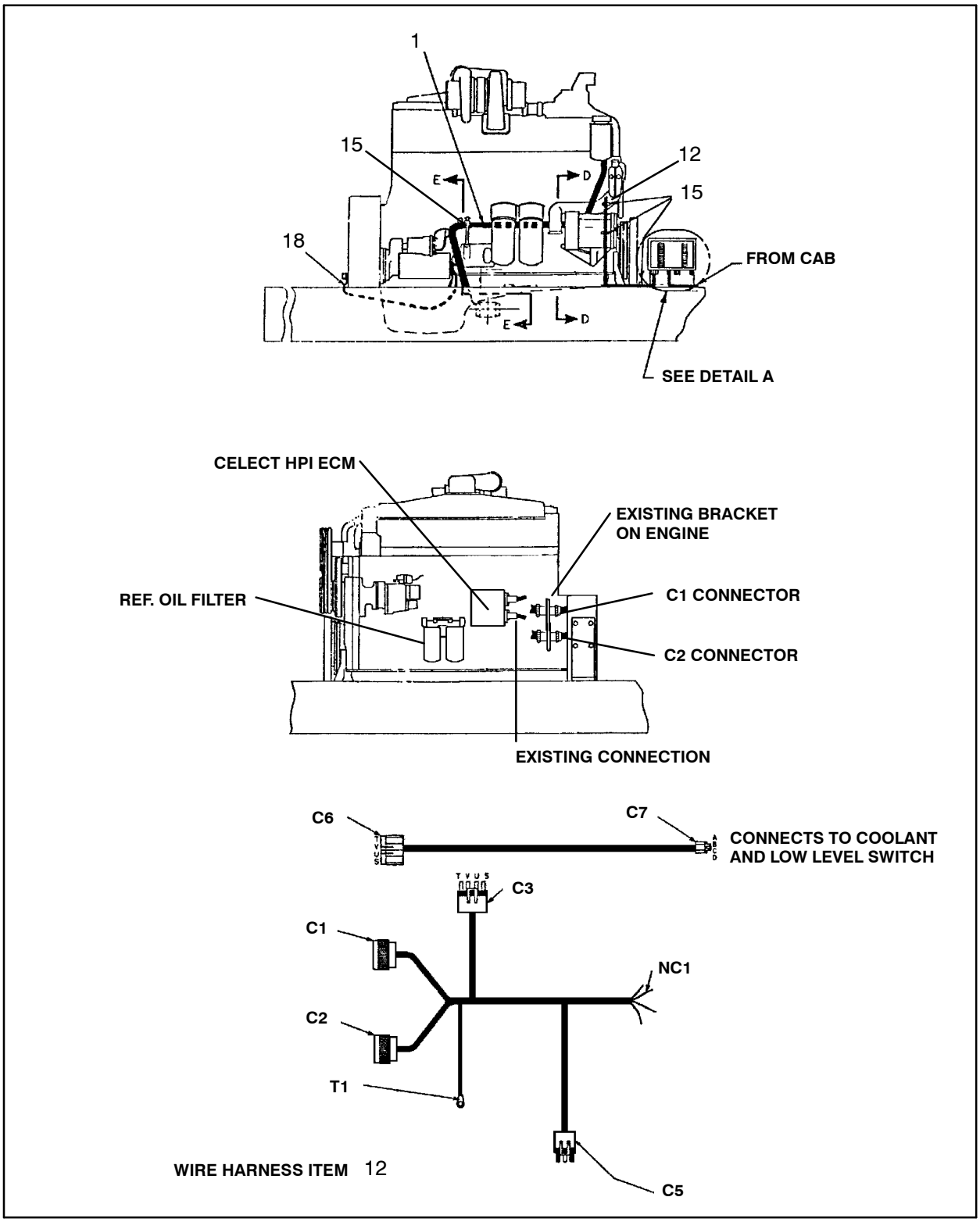

Figure 79 :WIRING, ENG. QSK19−600
E57479180 REV 00

WARNING: This manual contains data SPECIFIC to the drilling rig with serial number: 7341.

57479180 WIRING, ENG. QSK19−600

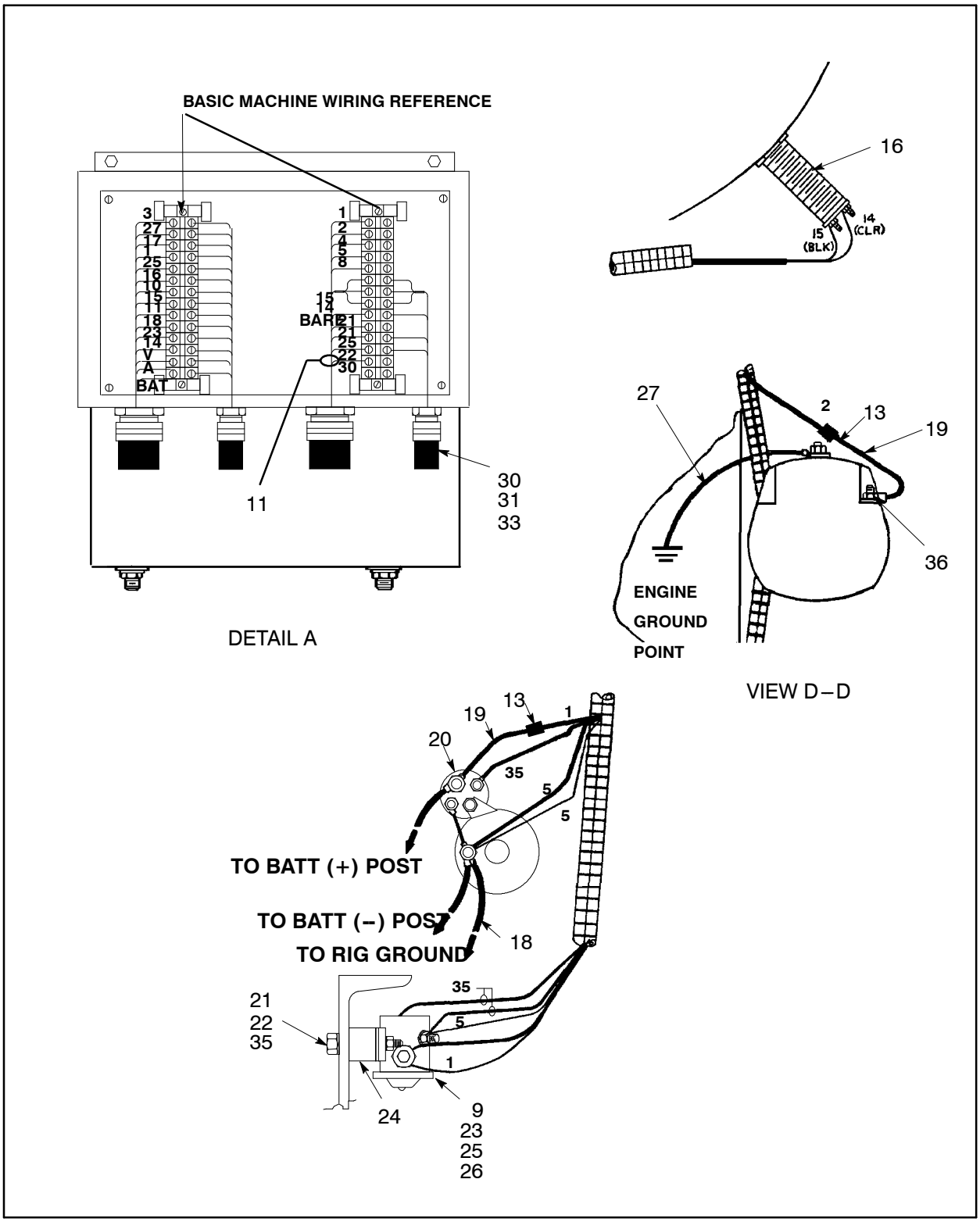

Figure 80 :WIRING, ENG. QSK19−600
E57479180 REV 00

57479180 WIRING, ENG. QSK19−600

ENGINE ASSY, QSK19−600

57452401

REF.	PART NO.	QTY.	UNIT	DESCRIPTION
001	57500795	1	EA	HARNESS,ENGINE QSK−1START
010	50247709	2.00	IN	TUBING, VINYL
011	95748802	4	EA	TIE, CABLE
012	57479198	1	EA	HARNESS,QSKECM/BATT/COOLA
013	57086332	2	EA	CONNECTOR
015	95301859	11	EA	CLAMP, HOSE
016	57037335	1	EA	SENSOR, MAGNETIC
018	52246519	1	EA	CABLE, GROUND−1/0 X 36”
019	56999360	2	EA	WIRE LINK−9” *
	56987795	9.00	IN	● - WIRE,LINK−#12
020	95359329	1	EA	TERMINAL, RING
021	57141939	2	EA	FASTENER,1/4−20 TEENUT
022	56784267	0.00	EA	ADHESIVE
023	59956466	1	EA	RELAY, SOLENOID−24VMARINE
024	57139131	2	EA	MOUNT, FLEX−BOLT SANDWICH
025	95931564	2	EA	NUT, HEX−1/4−20
026	95934766	2	EA	WASHER, LOCK−1/4 PLATED
027	56949084	1	EA	WIRE, GROUND
	56937022	18.00	FT	● - WIRE ELEC
	56921448	2	EA	● - TERMINAL
028	95371092	2	EA	CLAMP, HOSE
030	56992191	1	EA	CONNECTOR
031	50619915	1	EA	NUT, LOCK−1/2” CONDUIT
033	50625839	1	EA	BUSHING, CONDUIT
035	95934303	2	EA	WASHER, LOCK−5/16 PLATED
036	56921430	1	EA	TERMINAL

57479180 WIRING, ENG. QSK19−600

This page is blank.

57474702 BATTERY,INSTALL

BATTERY INSTALLATION

TP: 57474702

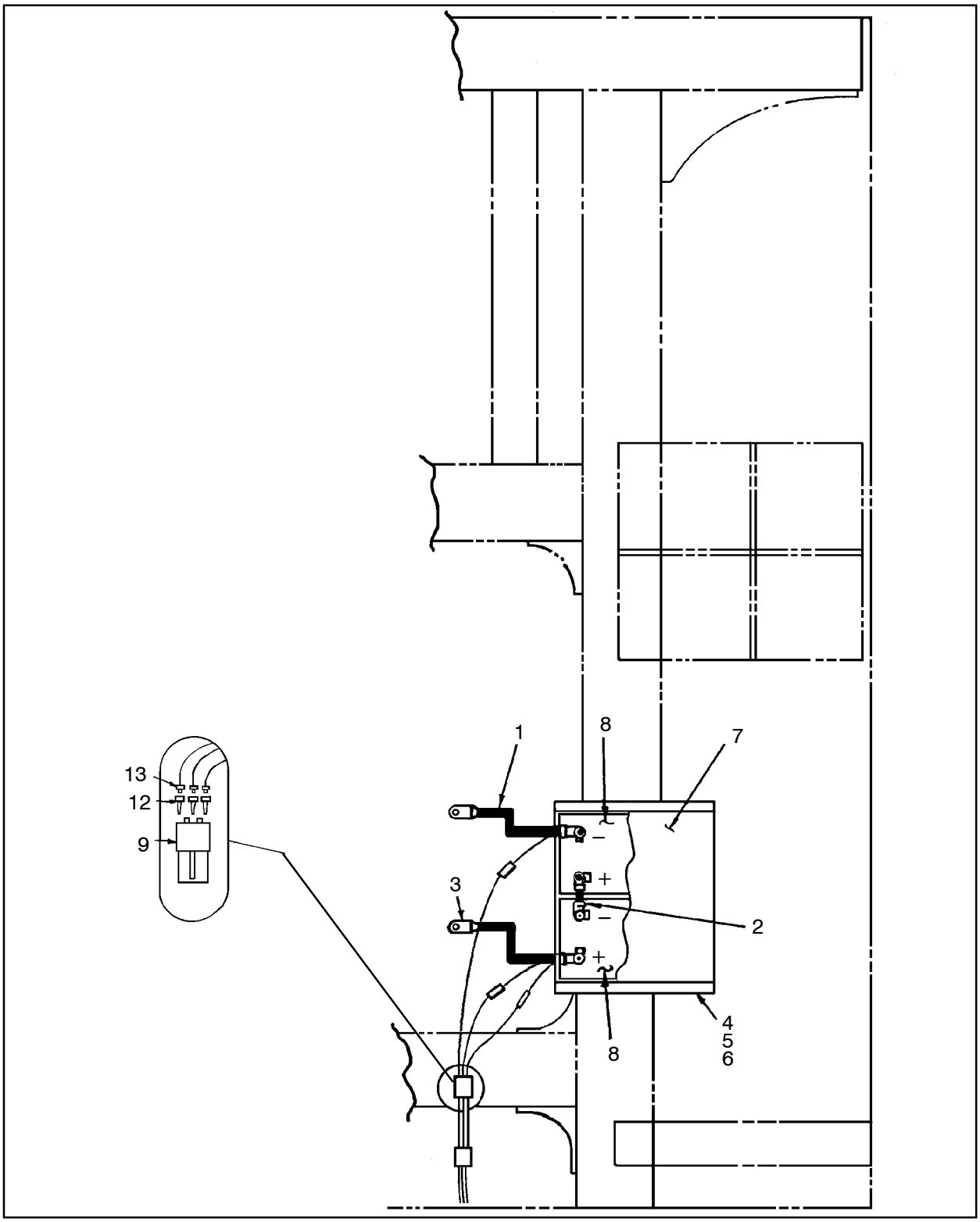

Figure 81 :BATTERY,INSTALL
D57474702 REV 00

WARNING: This manual contains data SPECIFIC to the drilling rig with serial number: 7341.

57474702 BATTERY,INSTALL

REF.	PART NO.	QTY.	UNIT	DESCRIPTION
001	57474686	1	EA	CABLE ASSY,NEG–2/0AWG,80”
002	30441570	1	EA	CABLE, BATTERY
003	57474694	1	EA	CABLE ASSY,POS–2/0AWG,64”
004	95934592	6	EA	SCREW, CAP–3/8–16 X 2–1/4
005	95922894	6	EA	NUT, HEX–3/8–16
006	95937413	6	EA	WASHER, LOCK–3/8 PLATED
007	58231887	1	EA	BOX, BATTERY
----------	57143505	1	EA	● - COVER, BATTERY
008	57113177	2	EA	BATTERY, 12V–8DW/ELECTROL
009	59895151	1	EA	CONNECTOR, 3–WAY,FEMALE
012	59854828	3	EA	TERMINAL, 14–16 AWG MALE
013	57400715	3	EA	SEAL, 14–12 AWG CABLE
100	57482606	0	EA	TOOL, PIN/SEAL–EXT INSTL
101	57482614	0	EA	TOOL, CRIMPING

57471872 SILENCER, EXHAUST ASSEMBLY

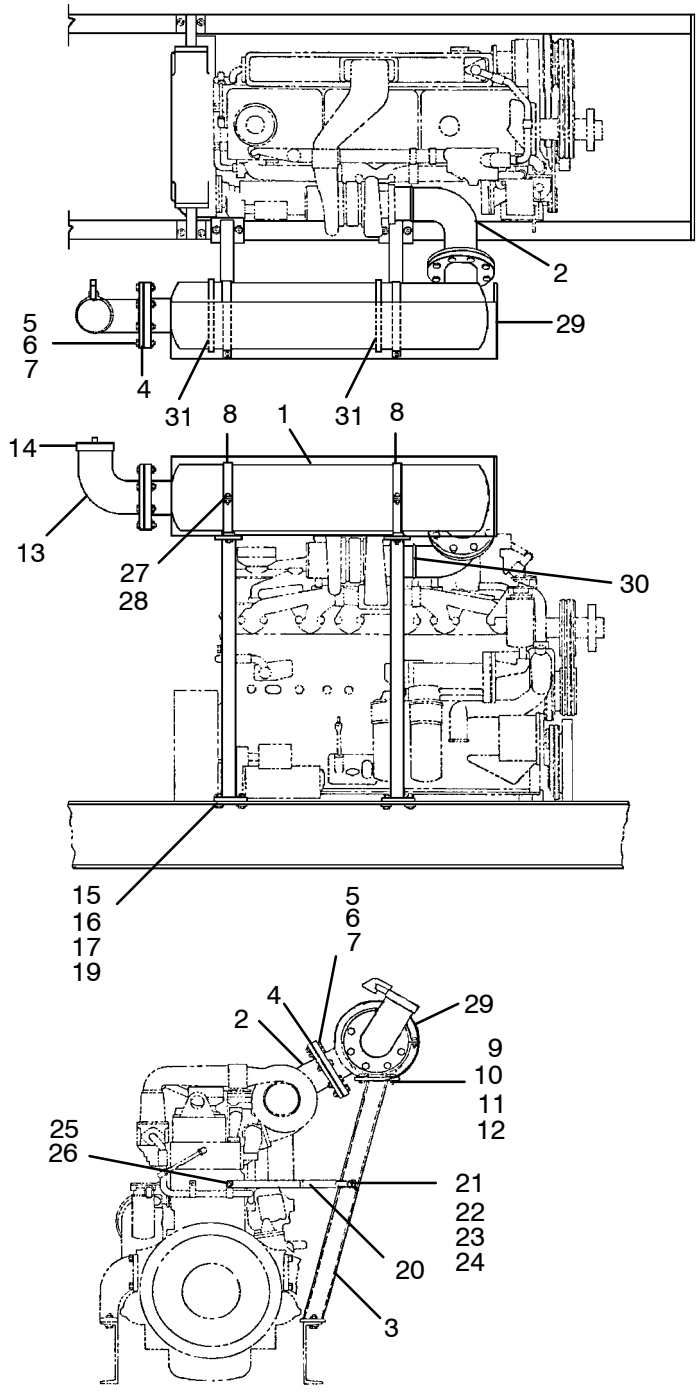

Figure 82 :SILENCER, EXHAUST ASSEMBLY
D57231243 TAB

WARNING: This manual contains data SPECIFIC to the drilling rig with serial number: 7341.

57471872 SILENCER, EXHAUST ASSEMBLY

REF.	PART NO.	QTY.	UNIT	DESCRIPTION
001	57024234	1	EA	SILENCER
002	57471864	1	EA	ELBOW,FLEX W/FLANGE
003	57471856	2	EA	MOUNT SILENCER
004	50419670	2	EA	GASKET
005	95035457	16	EA	SCREW, CAP–3/4–10 X 2–1/4
006	95081808	16	EA	WASHER, LOCK–3/4
007	95077822	16	EA	NUT, HEX–3/4–10
008	50266832	2	EA	BAND
009	95920682	4	EA	SCREW, CAP–3/8–16 X 1–1/4
010	95937413	4	EA	WASHER, LOCK–3/8 PLATED
011	95922894	4	EA	NUT, HEX–3/8–16
012	95922233	4	EA	WASHER, FLAT–3/8
013	50622810	1	EA	PIPE, EXHAUST ELBOW
014	50469238	1	EA	CAP, WEATHER
015	95644126	4	EA	SCREW CAP
016	95266409	4	EA	WASHER, BEVEL–5/8
017	95077590	4	EA	NUT, HEX STOP–5/8–11
019	95064705	4	EA	WASHER, FLAT–5/8
020	57231268	1	EA	BRACE,REAR MUFFLER MOUNT
021	95081824	1	EA	WASHER, LOCK–1/2
022	95081667	1	EA	WASHER, FLAT–1/2
023	95104170	1	EA	SCREW, CAP–1/2–13 X 1–1/2
024	95077798	1	EA	NUT, HEX–1/2–13
025	95209052	1	EA	SCREW, CAP–5/8–18 X 1–1/2
026	95081790	1	EA	WASHER, LOCK–5/8
027	95958948	2	EA	SCREW, CAP–5/16–18 X 3
028	95929782	2	EA	NUT, HEX–5/16–18
028	95934303	2	EA	WASHER, LOCK–5/16 PLATED
029	57481517	1	EA	SHIELD, HEAT–SILENCER
030	57481970	1	EA	CLAMP,6.75”EXHAUST,QSK
031	57399941	2	EA	CLAMP–12” CAGE

57503534 COOLER/FAN – 600HP ENG

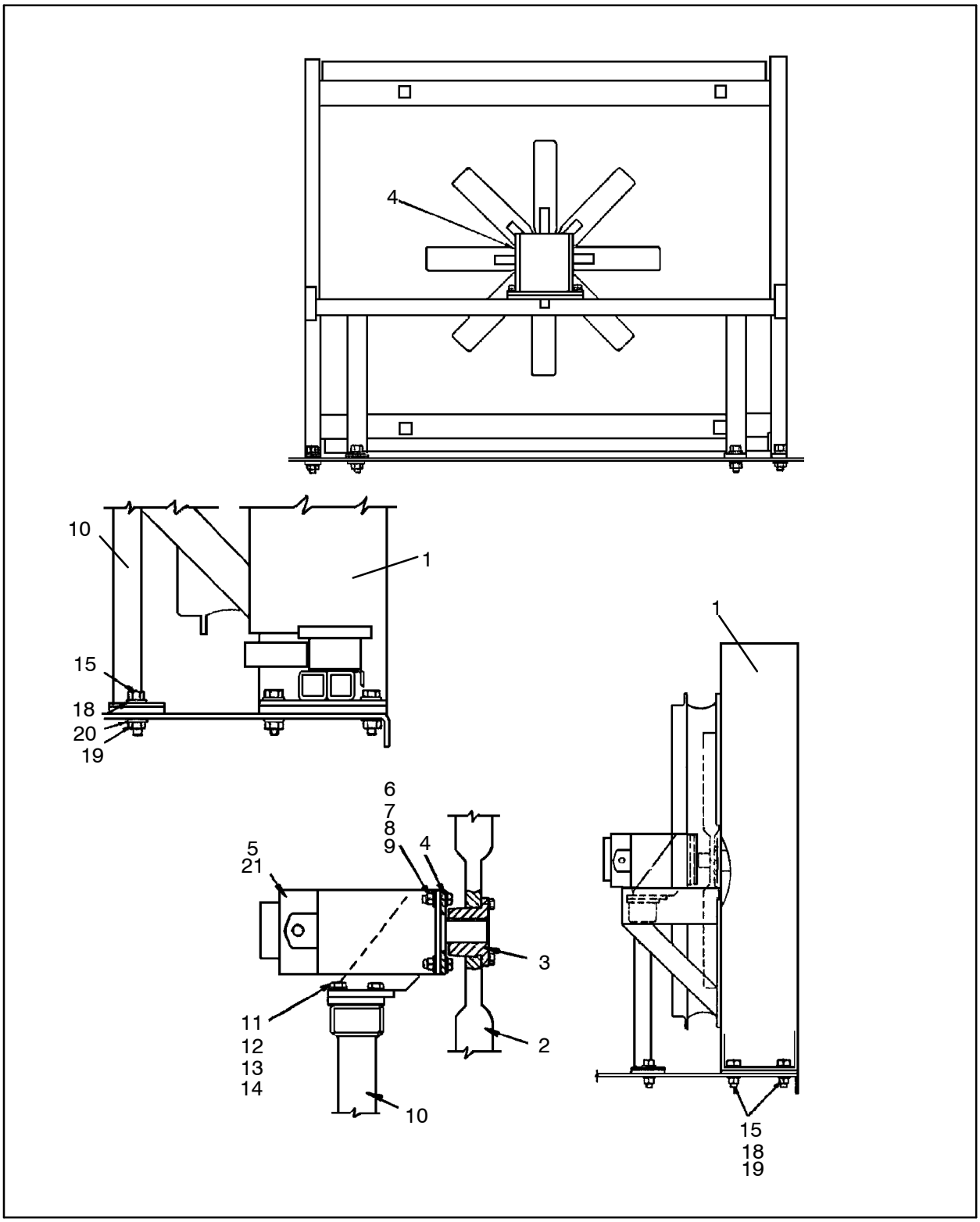

Figure 83 :COOLER/FAN – 600HP ENG
D57503534 REV01

WARNING: This manual contains data SPECIFIC to the drilling rig with serial number: 7341.

57503534 COOLER/FAN–600HP ENG

REF.	PART NO.	QTY.	UNIT	DESCRIPTION	
001	57494254	1	EA	COC/HOC/RAD–SIDE BY SIDE	*(See figure 84)*
002	57436024	1	EA	FAN BLADE–54IN. 8 BLADE	
003	57480980	1	EA	BUSHING, TAPER–1.75 BORE	
004	57477259	1	EA	BRACKET, FAN MOTOR	
005	57477242	1	EA	MOTOR, HYDRAULIC–AX.PISTN	
006	95104667	4	EA	SCREW, CAP–3/4–10 X 3	
007	95077319	4	EA	NUT, HEX STOP–3/4–10	
008	95200093	4	EA	WASHER, FLAT–3/4	
009	58233693	4	EA	WASHER, CINCH	
010	57503591	2	EA	SUPPORT LEG – COOLER	
011	95104188	4	EA	SCREW, CAP–1/2–13 X 1–3/4	
012	95081824	4	EA	WASHER, LOCK–1/2	
013	95064697	4	EA	WASHER, FLAT–1/2	
014	52223872	8	EA	SHIM	
015	95104527	8	EA	SCREW,CAP–5/8–11 X 4–1/2	
018	95094314	16	EA	WASHER, FLAT–5/8	
019	95077814	8	EA	NUT, HEX 5/8–11	
020	95081790	8	EA	WASHER, LOCK–5/8	
021	57140469	1	EA	DECAL, DANGER–ROT.BLADE	
022	50262526	22.00	GL	ANTI–FREEZE	

57494254 COC/HOC/RAD – SIDE BY SIDE

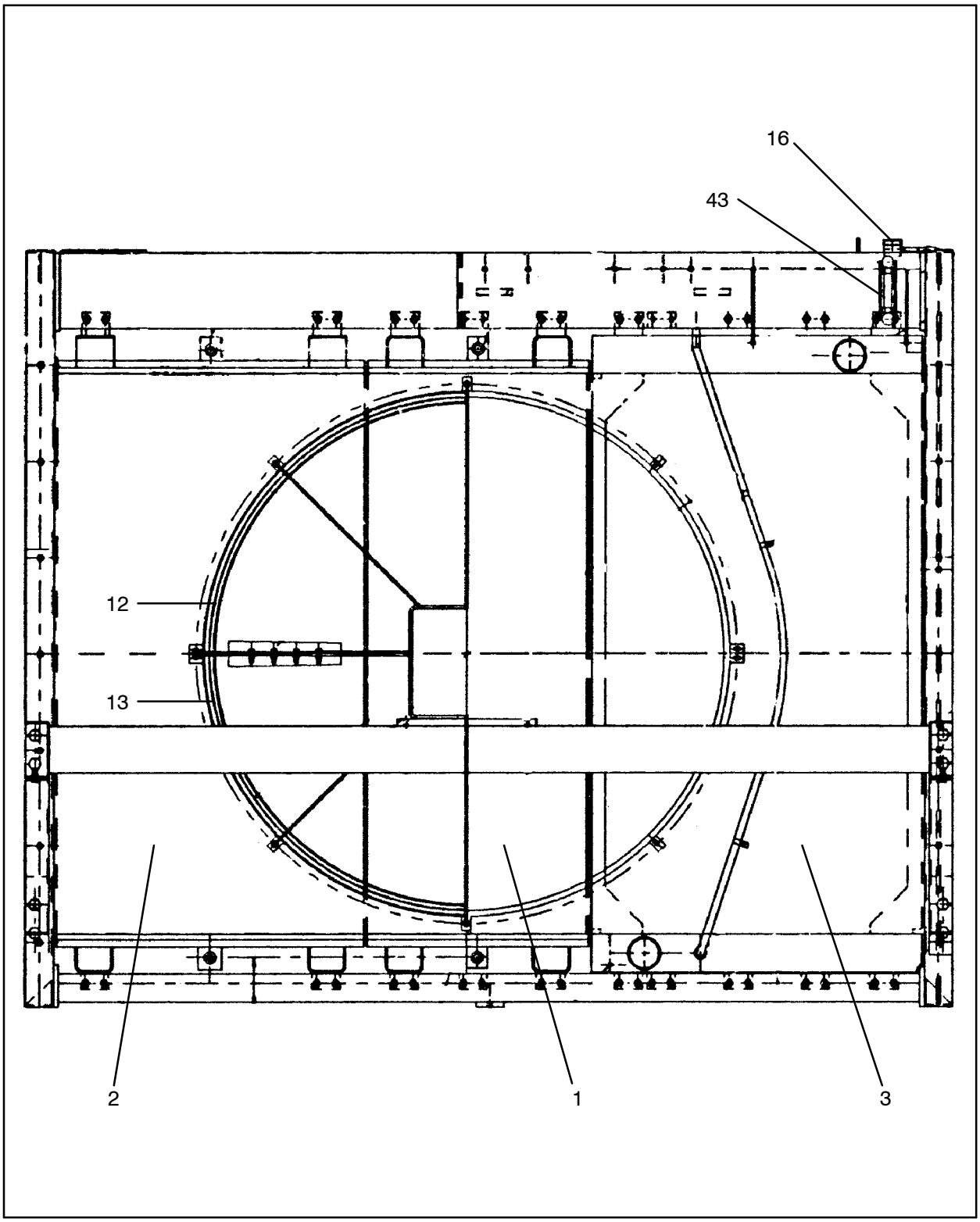

Figure 84 :COC/HOC/RAD – SIDE BY SIDE
C57494254 REV 00

WARNING: This manual contains data SPECIFIC to the drilling rig with serial number: 7341.

57494254 COC/HOC/RAD–SIDE BY SIDE

REF.	PART NO.	QTY.	UNIT	DESCRIPTION
001	57498354	1	EA	CORE, HOC
002	57498347	1	EA	CORE, COC
003	57524357	1	EA	RADIATOR ASSY, ENGINE
012	57502536	1	EA	GUARD, FAN–UPPER
013	57502544	1	EA	GUARD, FAN–LOWER
016	58211996	1	EA	FILLER CAP
043	57499105	1	EA	SIGHT GLASS ASSY

57504235 RADIATOR PIPING ASSY – DM45

There is no drawing available at this time.

Figure 85 :RADIATOR PIPING ASSY – DM45
E57504235 REV 00

57504235 RADIATOR PIPING ASSY–DM45

REF.	PART NO.	QTY.	UNIT	DESCRIPTION
001	57504219	1	EA	MANIFOLD ENG.COOL.OUTLET
002	56989353	2	EA	HOSE, RADIATOR
	56989338	4.00	IN	● - HOSE, RADIATOR–BULK
003	95301370	4	EA	CLAMP HOSE
023	57471773	1	EA	MANIFOLD ENG.COOLANTINLET
024	56983943	3	EA	HOSE, RADIATOR
025	58208851	6	EA	CLAMP, HOSE $
026	57504227	1	EA	MANIFOLD COOLANT INLET
028	57090763	2	EA	ANGLE
029	95375341	2	EA	U–BOLT
030	95081824	4	EA	WASHER, LOCK–1/2
031	95077798	4	EA	NUT, HEX–1/2–13
032	95064697	4	EA	WASHER, FLAT–1/2
037	50459486	1	EA	ORIFICE, .038
038	57221228	1	EA	TUBE, DEARERATION NTA855
039	57030405	1	EA	GASKET
040	57491995	1	EA	ADAPTER,PUMP SUCTION–QSK

57471559 AIR FILTERS ASSY

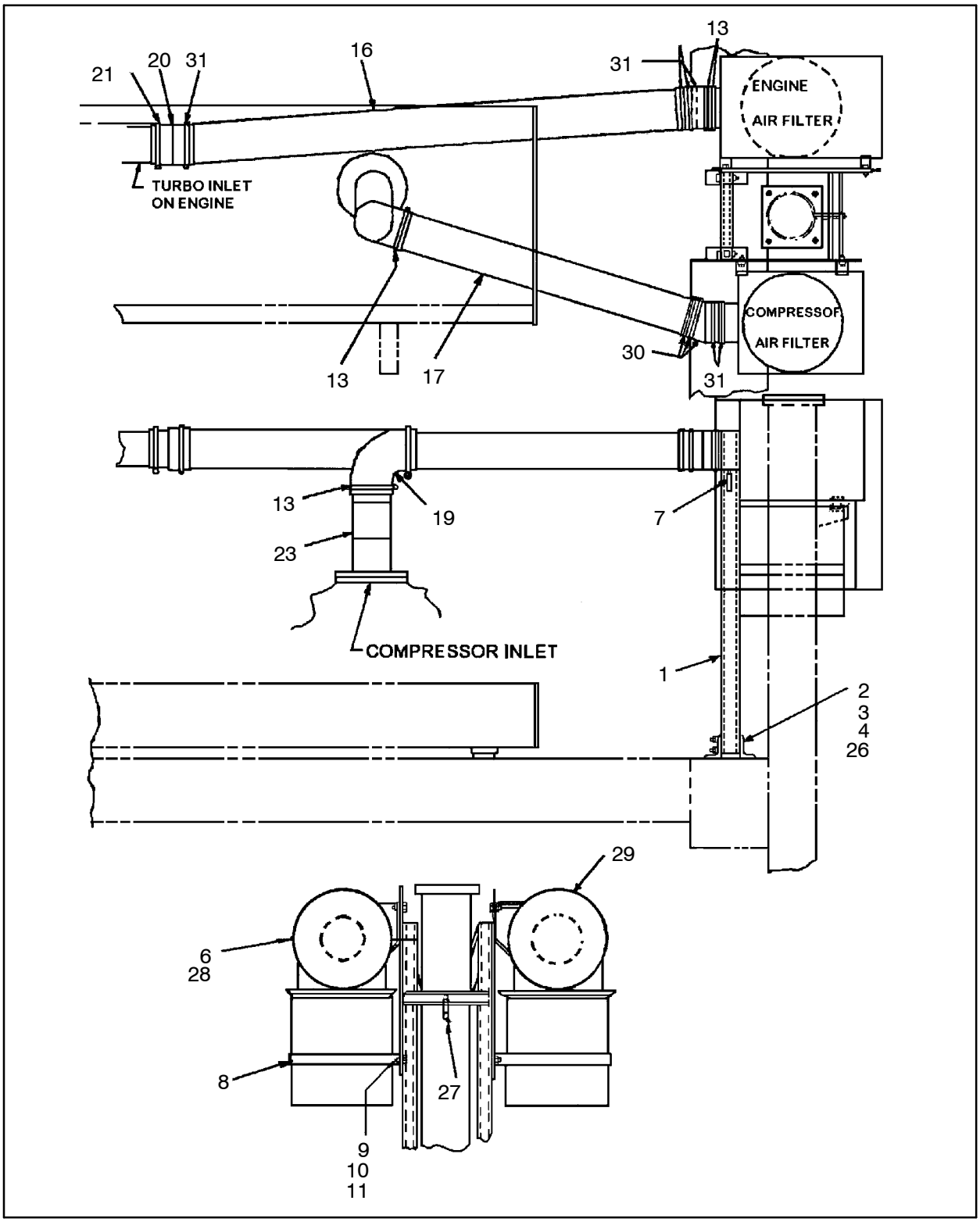

Figure 86 :AIR FILTERS ASSY
D57471559 REV 00

WARNING: This manual contains data SPECIFIC to the drilling rig with serial number: 7341.

57471559 AIR FILTERS ASSY

REF.	PART NO.	QTY.	UNIT	DESCRIPTION	
001	57506545	1	EA	SUPPORT, AIR CLEANER	
002	95104501	4	EA	SCREW,CAP–HEX 5/8–11 X 4	
003	95081790	4	EA	WASHER, LOCK–5/8	
004	95077814	4	EA	NUT, HEX 5/8–11	
006	56899669	2	EA	SHROUD, INLET	
007	52265311	2	EA	INDICATOR, RESTRICTION	
008	58044744	2	EA	BAND, MOUNTING	
009	95934592	9	EA	SCREW, CAP–3/8–16 X 2–1/4	
010	95937413	8	EA	WASHER, LOCK–3/8 PLATED	
011	95922894	8	EA	NUT, HEX–3/8–16	
013	57440570	3	EA	CLAMP, CONSTANT TORQUE	
016	57498883	1	EA	TUBE–AIR, 7”OD X 93”LG	
017	57472524	1	EA	AIR DUCT,COMP.	
019	52248440	1	EA	ELBOW	
020	58166158	1	EA	HOSE HUMP	
021	57440547	1	EA	CLAMP, CONSTANT TORQUE	
023	57327785	1	EA	TUBE – AIR INLET	
024	52176591	2	EA	NAMEPLATE, AIR CLEANER	
025	52176609	2	EA	NAMEPLATE, AIR CLEANER	
026	57452013	4	EA	BRACKET	
027	57452039	1	EA	GUSSET	
028	57420853	1	EA	AIR CLEANER	*(See figure 87)*
029	57496556	1	EA	AIR FILTER – 08	*(See figure 88)*
030	56799844	1	EA	HOSE HUMP	
031	57439283	8	EA	CLAMP, CONSTANT TORQUE	
032	56940364	1	EA	HOSE HUMP	
040	57019853	2	EA	PLATE	

57420853 AIR CLEANER

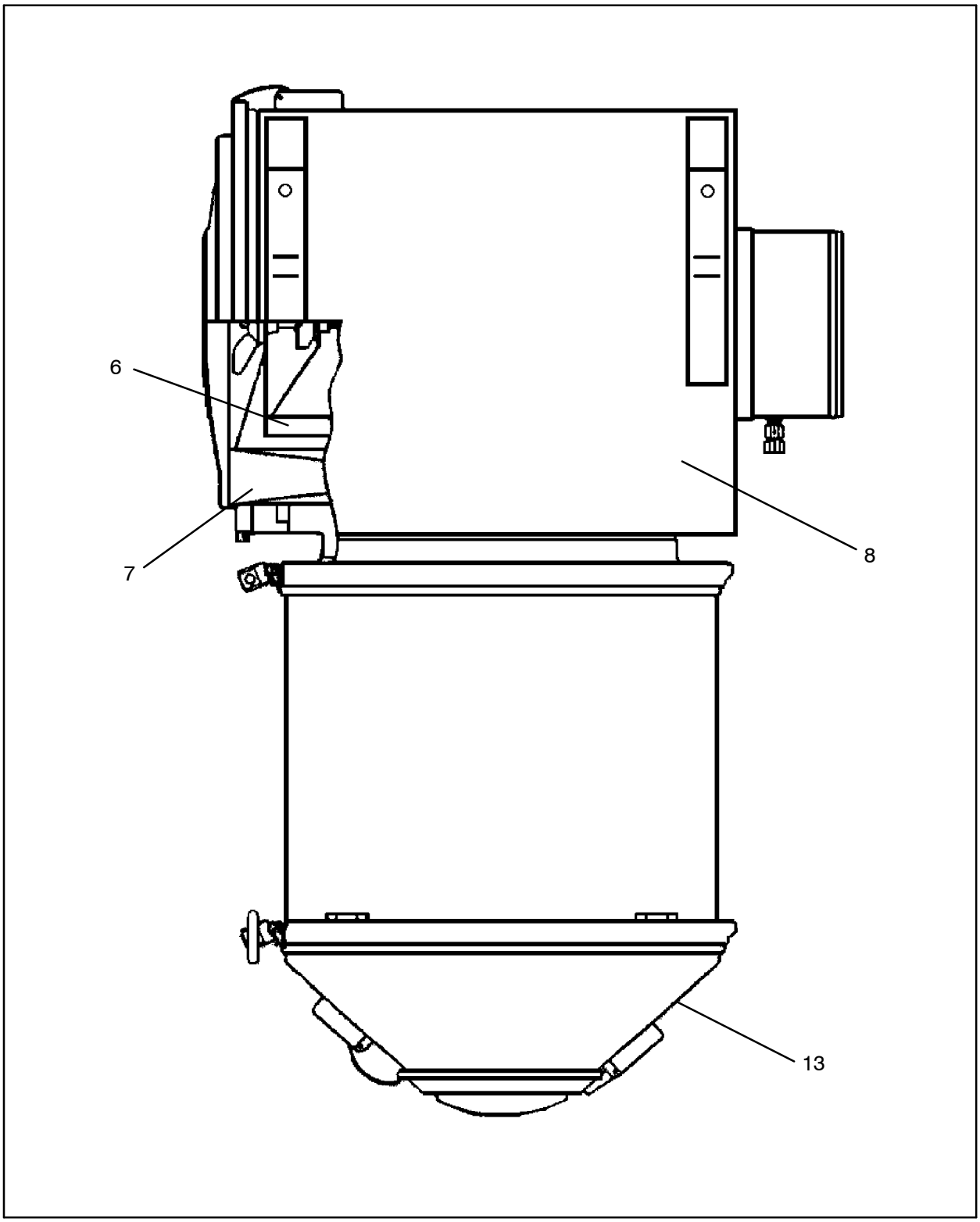

Figure 87 :AIR CLEANER
C57420853 REV 01

57420853 AIR CLEANER

REF.	PART NO.	QTY.	UNIT	DESCRIPTION
006	50616408	1	EA	ELEMENT, SAFETY
007	50616390	1	EA	ELEMENT, PRIMARY
008	50816529	1	EA	BODY ASSY – AIR CLEANER
013	56903586	1	EA	CUP, DUST

57496556 AIR FILTER – 08

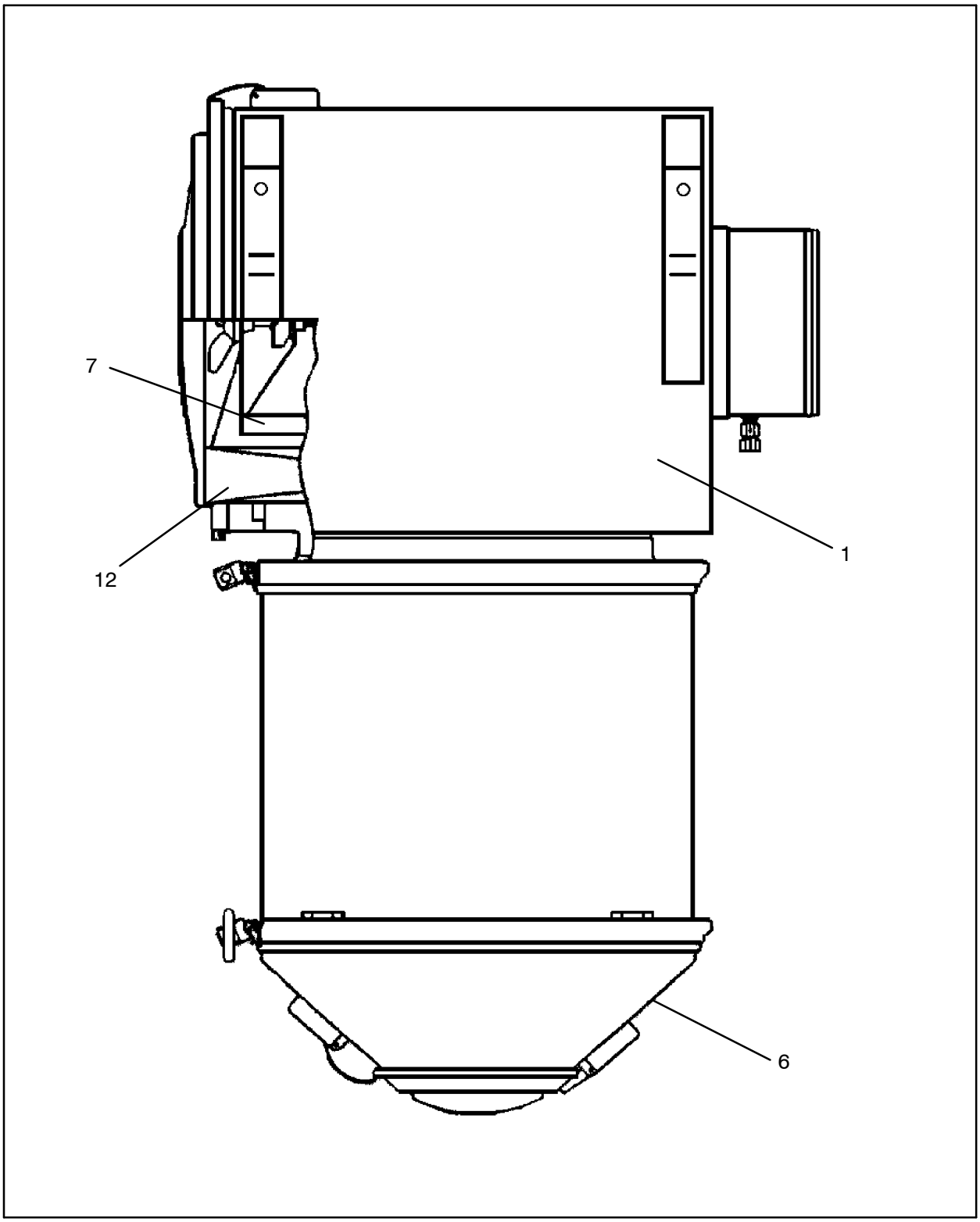

Figure 88 :AIR FILTER – 08
C57496556 REV 00

57496556 AIR FILTER – 08

REF.	PART NO.	QTY.	UNIT	DESCRIPTION
001	50817113	1	EA	CHAMBER
006	56903586	1	EA	CUP, DUST
007	52146966	1	EA	ELEMENT, SAFETY
012	52146958	1	EA	ELEMENT, PRIMARY

57475691 TANK&PIPING, FUEL−280GAL*

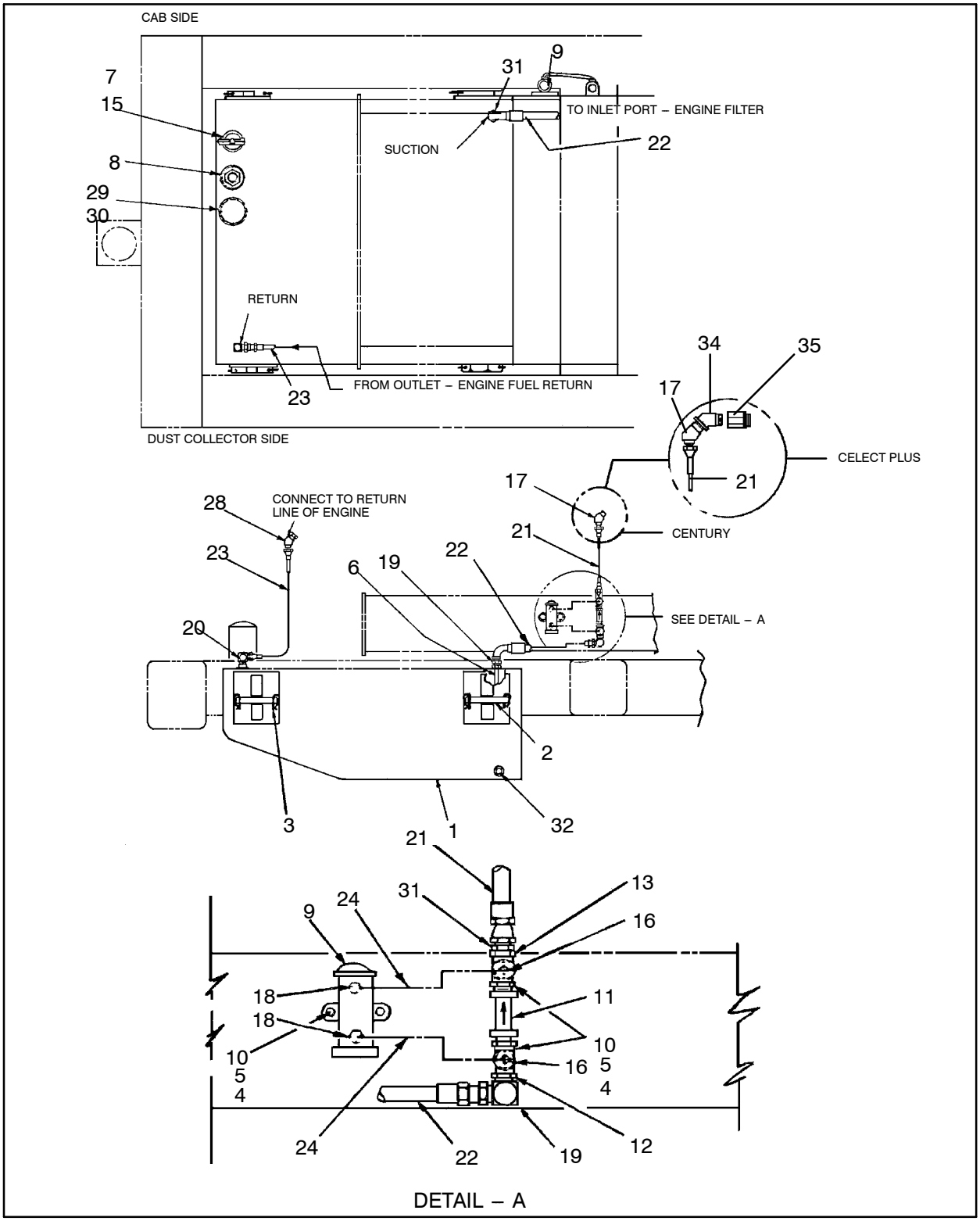

Figure 89 :TANK&PIPING, FUEL−280GAL*

D57475691 REV 02

57475691 TANK&PIPING, FUEL−280GAL*

REF.	PART NO.	QTY.	UNIT	DESCRIPTION
001	57474678	1	EA	TANK, FUEL−280 GAL.CAP.
002	57474579	4	EA	PIN, SUPPORT−FUEL TANK
003	52266731	8	EA	PIN, COTTER
004	95934766	6	EA	WASHER, LOCK−1/4 PLATED
005	95931564	6	EA	NUT, HEX−1/4−20
006	57475873	1	EA	TUBE, SUCTION−FUEL
007	57505018	1	EA	FILLER, TANK − 3” NPT
008	50616762	1	EA	GAUGE, FUEL
009	50258441	1	EA	PUMP, FUEL
010	95105466	2	EA	SUB 95920724−CAPSCREW,HEX
011	50829480	1	EA	VALVE, CHECK
012	95063475	1	EA	TEE
013	95003463	1	EA	TEE, PIPE
014	52263035	2	EA	U−BOLT
015	95074217	6	EA	SCREW, TAPING=HEX8−32X1/2
016	95330023	2	EA	FITTING, HYD
017	95279170	1	EA	FITTING, HYD
017	95376141	1	EA	ADAPTER−90DEG,ORING/JIC
018	95209086	2	EA	FITTING, HYD
019	95279543	1	EA	FITTING, HYD
020	95303335	1	EA	FITTING, HYD
021	56956899	1	EA	HOSE ASSY
022	57412322	1	EA	HOSE ASSY
023	57146912	1	EA	HOSE ASSY
024	57034357	2	EA	HOSE ASSY
027	52246774	100.00	GL	FUEL, DIESEL
028	95418166	1	EA	FITTING, SWIVEL−#8
029	57441941	1	EA	BREATHER, FILTER−3 MICRON
030	95647798	1	EA	FITTING, HYD
031	95356978	1	EA	ADAPTER,STR,JIC/O−RING
032	95653317	1	EA	FITTING, HYD
033	95746194	1	EA	PLUG, ORING−SAE 32
034	95341053	1	EA	FITTING, HYD
035	95529079	1	EA	FITTING, TUBE

57472706 COOLER,FUEL INSTL QSK19

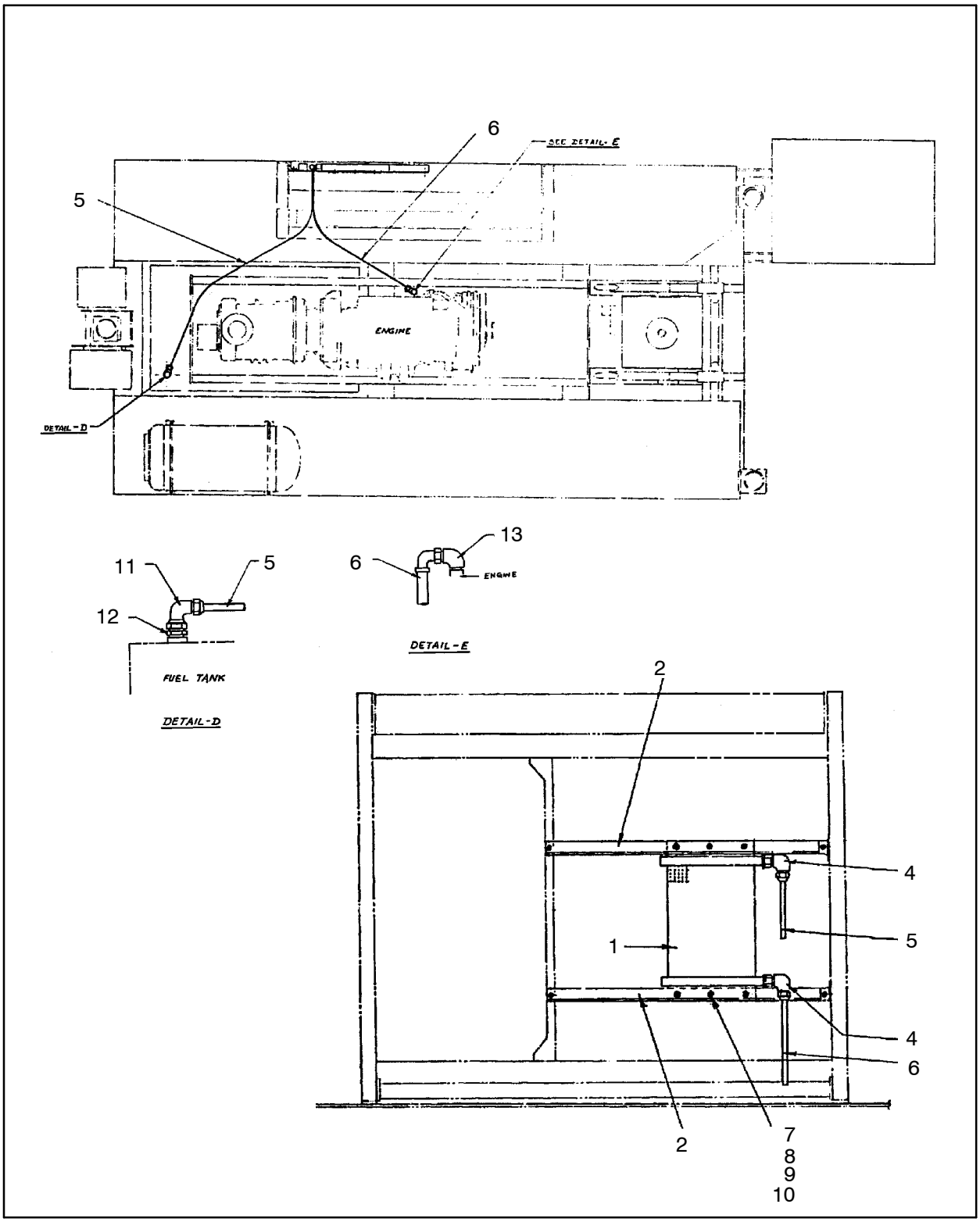

Figure 90 :COOLER,FUEL INSTL QSK19
D57472706 REV 01

WARNING: This manual contains data SPECIFIC to the drilling rig with serial number: 7341.

57472706 COOLER,FUEL INSTL QSK19

REF.	PART NO.	QTY.	UNIT	DESCRIPTION
001	57472698	1	EA	COOLER,FUEL,QSK19 ENGINES
002	57481533	2	EA	MOUNTING–FUEL COOLER
003	57481541	2	EA	ANGLE–FUEL COOLER MTG
004	95280186	2	EA	FITTING, HYD
005	52197589	1	AS	HOSE ASSY
006	57384539	1	EA	HOSE ASSY
007	95920682	14	EA	SCREW, CAP–3/8–16 X 1–1/4
008	95937413	14	EA	WASHER, LOCK–3/8 PLATED
009	95922233	14	EA	WASHER, FLAT–3/8
010	95922894	14	EA	NUT, HEX–3/8–16
011	95302147	1	EA	SWIVEL–90DEG,INT NPT/JIC
012	95364949	1	EA	FITTING, HYD
013	95279519	1	EA	FITTING, HYD
014	50516624	1	EA	ADAPTER

57413080 PREHEATER INSTALL–ENGINE

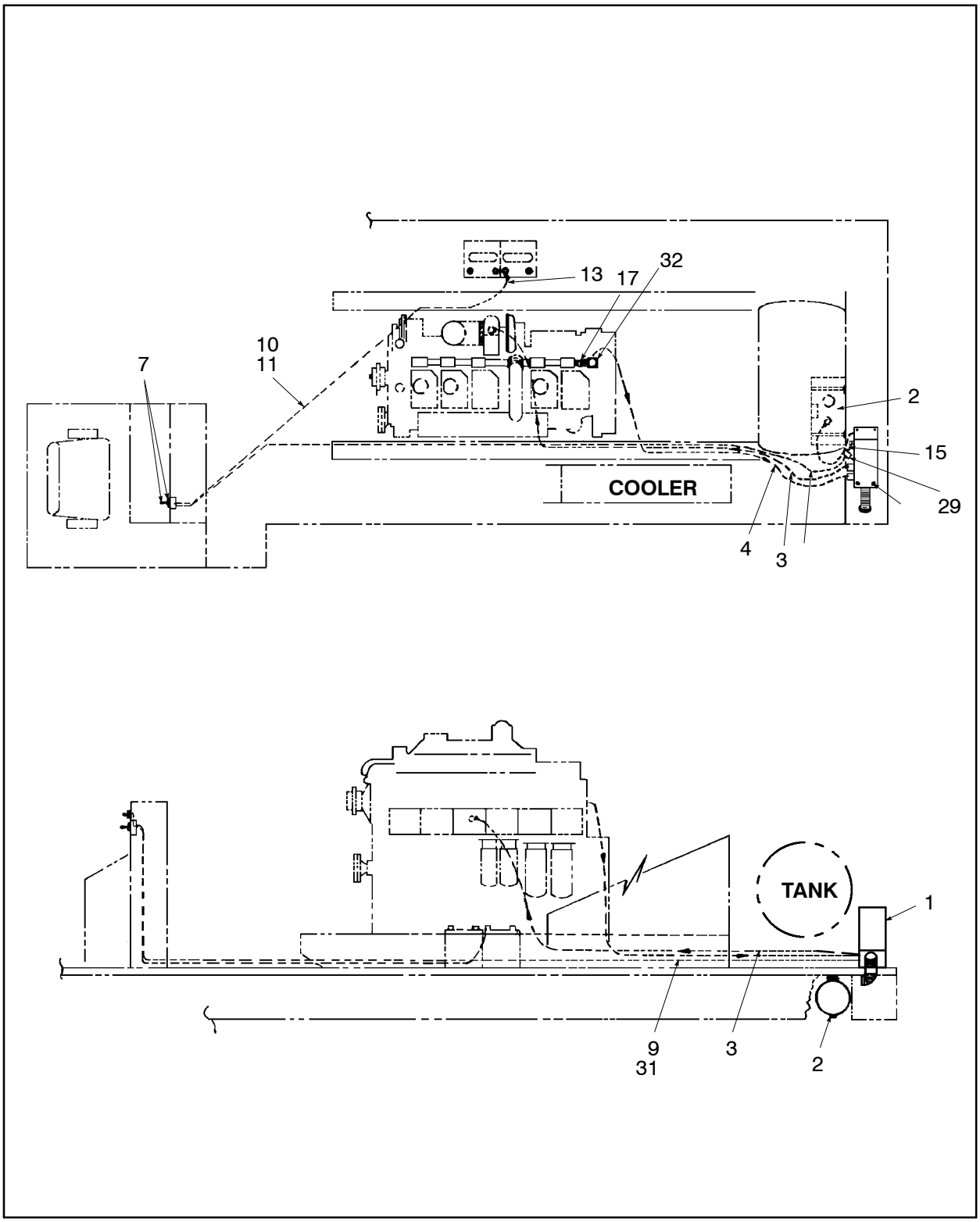

Figure 91 :PREHEATER INSTALL–ENGINE

D57413080 REV 01

WARNING: This manual contains data SPECIFIC to the drilling rig with serial number: 7341.

57413080 PREHEATER INSTALL – ENGINE

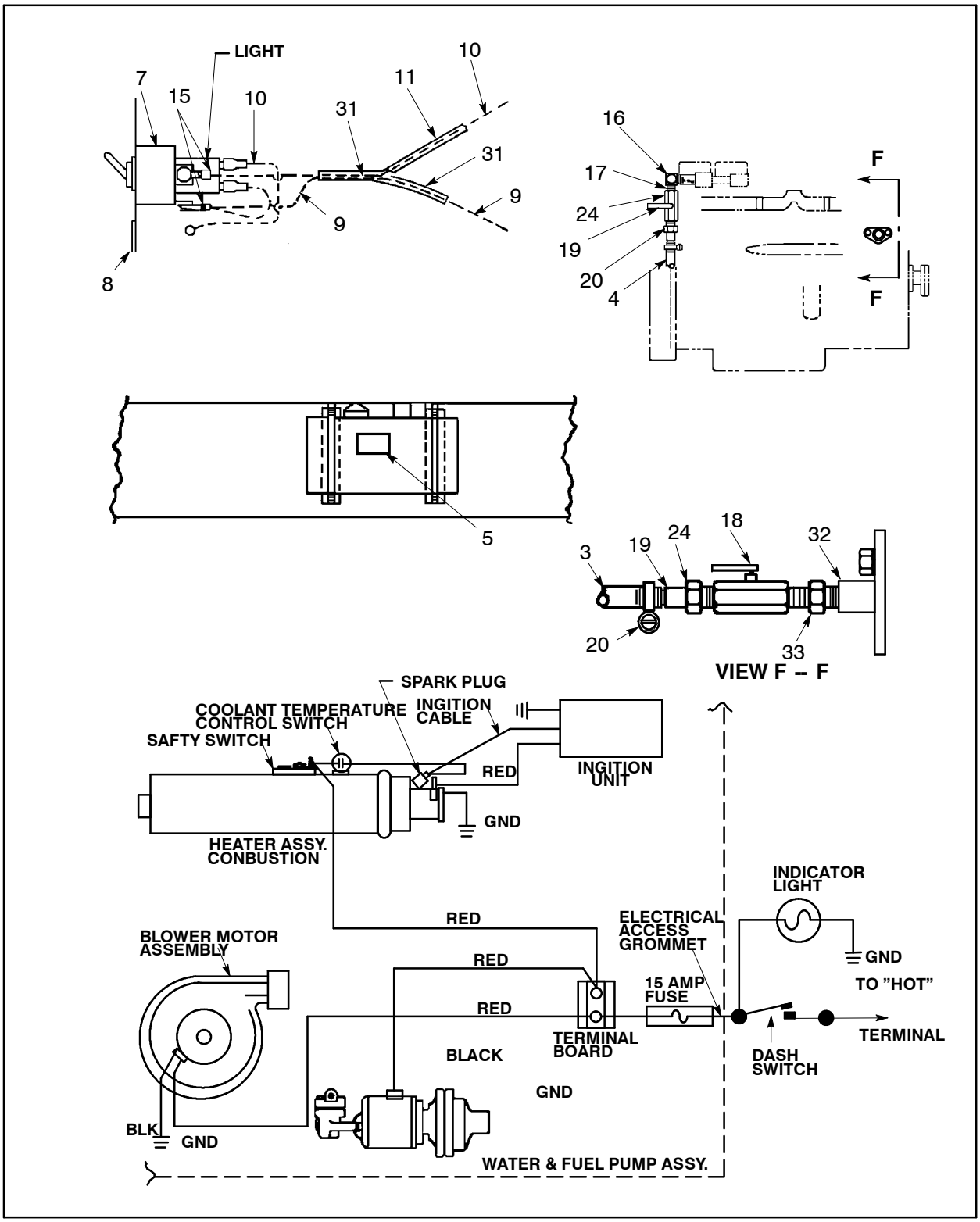

Figure 92 :PREHEATER INSTALL – ENGINE
D57413080 REV 01

57413080 PREHEATER INSTALL–ENGINE

REF.	PART NO.	QTY.	UNIT	DESCRIPTION	
001	57095150	1	EA	PREHEATER–ENG.COOL.,GAS	*(See figure 93)*
002	57095259	1	EA	TANK, FUEL	*(See figure 94)*
003	57065260	200.00	IN	HOSE,HYD–A10 BULK	
004	57065260	200.00	IN	HOSE,HYD–A10 BULK	
005	57094013	1	EA	DECAL, REG/UNLEADED GAS	
006	57096745	1	EA	DECAL, DANGER	
007	57098626	1	EA	GUARD, SWITCH	
008	57095770	1	EA	DECAL, PREHEATER SWITCH	
009	50249655	325.00	IN	WIRE, 14AWG–BLACK	
010	50249648	204.00	IN	WIRE, 14AWG–RED	
011	57358830	204.00	IN	CONDUIT, 3/8” NYLON	
012	57097792	1	EA	GROMMET, RUBBER	
013	58150178	1	EA	TERMINAL, RING	
014	95748802	3	EA	TIE, CABLE	
015	58150186	3	EA	TERMINAL, RING	
016	95264925	3	EA	FITTING, HYD	
017	95056578	1	EA	NIPPLE	
018	50212224	2	EA	VALVE, BALL–3/4”	
019	57082018	2	EA	NIPPLE, HOSE	
020	95220844	4	EA	CLAMP, HOSE	
021	95920674	4	EA	SCREW, CAP–3/8–16 X 1	
022	95937413	4	EA	WASHER, LOCK–3/8 PLATED	
023	95922894	4	EA	NUT, HEX–3/8–16	
024	95037438	2	EA	BUSHING, PIPE	
029	95256681	1	EA	CLAMP	
030	58078718	5	EA	TIE, CABLE	
031	57358830	325.00	IN	CONDUIT, 3/8” NYLON	
032	95446530	1	EA	COUPLING	
033	95323358	2	EA	FITTING, STR–EXT NPT RUN	
034	57130577	1	EA	HOLDER, FUSE	
035	52241106	1	EA	FUSE, 15A	
036	95056388	1	EA	NIPPLE	

57413080 PREHEATER INSTALL–ENGINE

This page is blank.

57095150 PREHEATER – ENG.COOL.,GAS

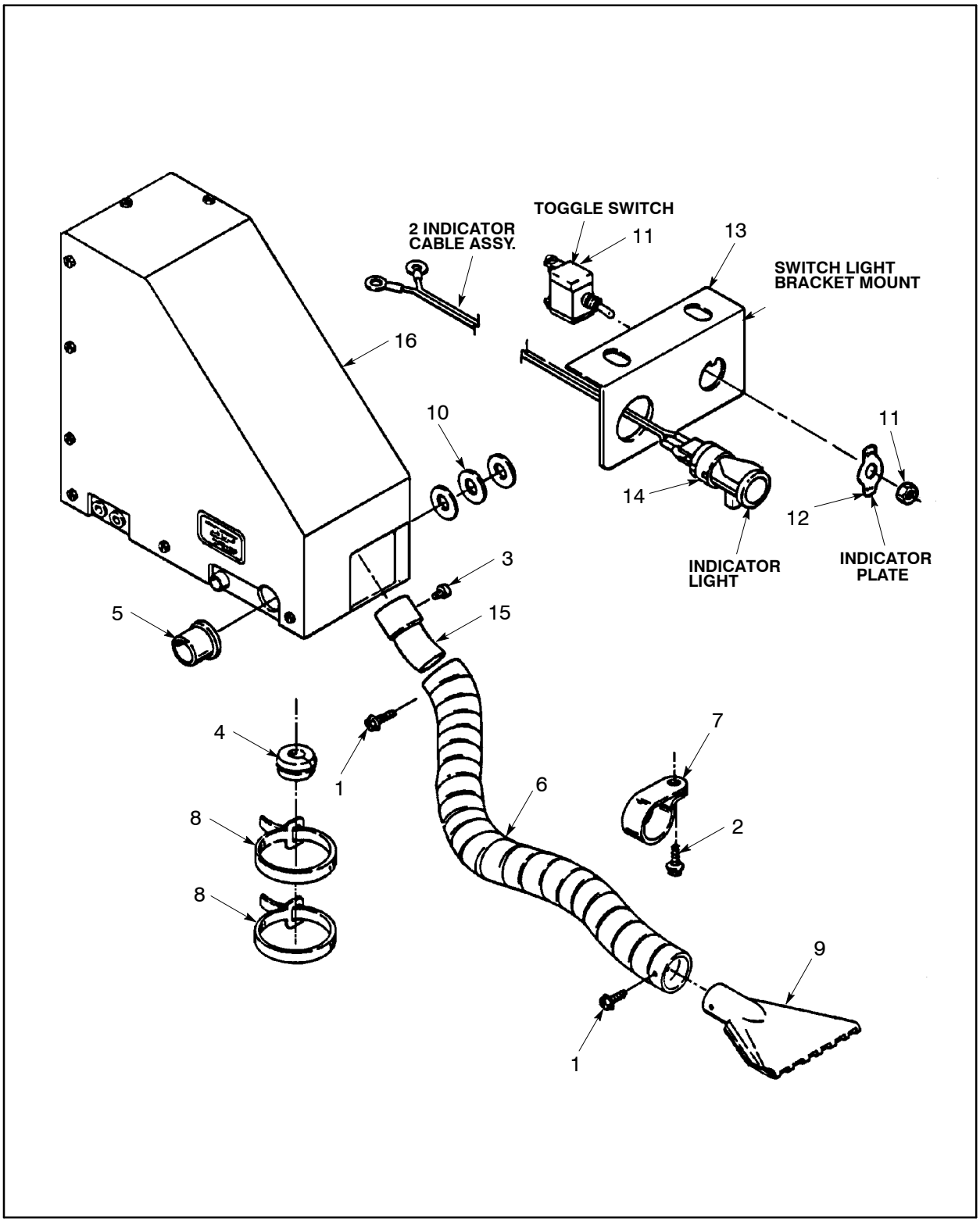

Figure 93 :PREHEATER – ENG.COOL.,GAS
A57095150 REV 06

WARNING: This manual contains data SPECIFIC to the drilling rig with serial number: 7341.

57095150 PREHEATER–ENG.COOL.,GAS

REF.	PART NO.	QTY.	UNIT	DESCRIPTION
001	95471157	2	EA	SCREW
002	95657425	1	EA	SCREW
003	95578423	1	EA	SCREW
004	57173767	1	EA	GROMMET
005	57173775	1	EA	GROMMET
006	57173783	1	EA	TUBE,FLEX. EXHAUST
007	57173791	1	EA	CLAMP
008	57173809	2	EA	STRAP
009	57173817	1	EA	DIFFUSER, EXHAUST
010	57173825	3	EA	SPACER
011	57173833	1	EA	SWITCH, TOGGLE
012	57173841	1	EA	PLATE,INDICATOR
013	57173858	1	EA	BRACKET, MOUNTING
014	57173866	1	EA	LIGHT ASSEMBLY
015	57173874	1	EA	EXTENSION, TUBE
	LOOSE ITEMS NOT SHOWN			
016	57284275	1	EA	COVER, ASSY–PREHEATER
017	57242240	1	EA	BURNER ASSY
018	57240194	1	EA	BLOWER
019	57240202	1	EA	MOTOR ASSEMBLY
020	57095168	1	EA	IGNITION UNT
021	57095176	1	EA	SWITCH,SAFE.
022	57095184	1	EA	KIT,SERVICE
023	57095192	1	EA	SPARK PLUG KIT–PRE–HTR
024	57095200	1	EA	NOZZLE,FUEL
026	57095226	1	EA	KIT,REPAIR
027	57095234	1	EA	KIT,REPAIR
028	57095242	1	EA	GAUGE,PLUG
029	57173841	1	EA	PLATE,INDICATOR
030	57173858	1	EA	BRACKET, MOUNTING

57095259 TANK, FUEL

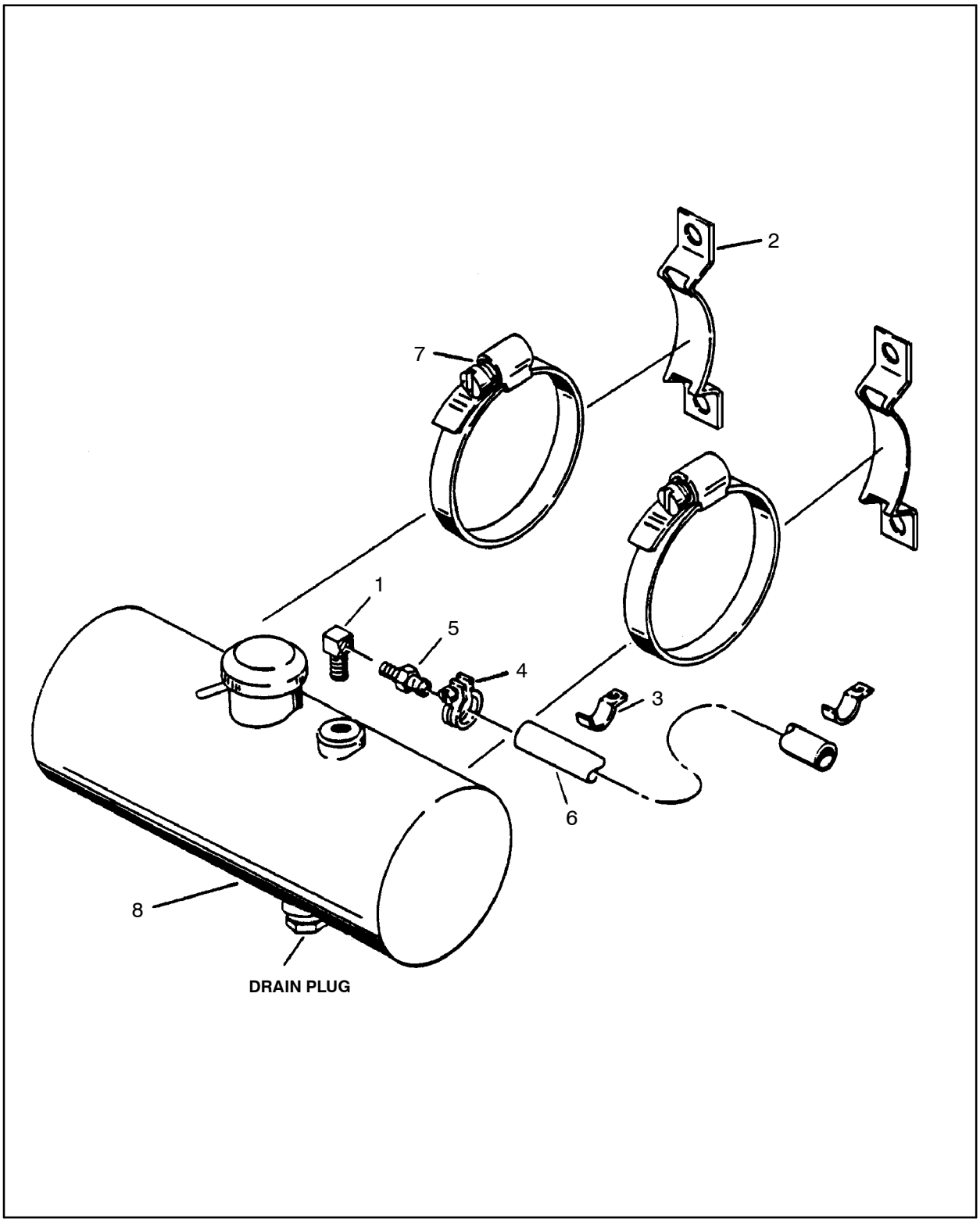

Figure 94 :TANK, FUEL
A57095259 REV01

WARNING: This manual contains data SPECIFIC to the drilling rig with serial number: 7341.

57095259 TANK, FUEL

REF.	PART NO.	QTY.	UNIT	DESCRIPTION
001	95365599	1	EA	ELBOW,ST–90DEG,EXT/INTNPT
002	57173700	2	EA	BRACKET, MOUNTING
003	57173718	2	EA	CLAMP,SUPPORT FUELING
004	57173726	2	EA	CLAMP, FITTING
005	57173734	1	EA	CONNECTOR, 1/8 PIPE
006	57173742	1	EA	HOSE, FUEL LINE
007	57173759	2	EA	CLAMP, 6.00 DIA
008	57173882	1	EA	TANK, ASSM. FUEL

57133258 INJECTION ASSEMBLY – ETHER

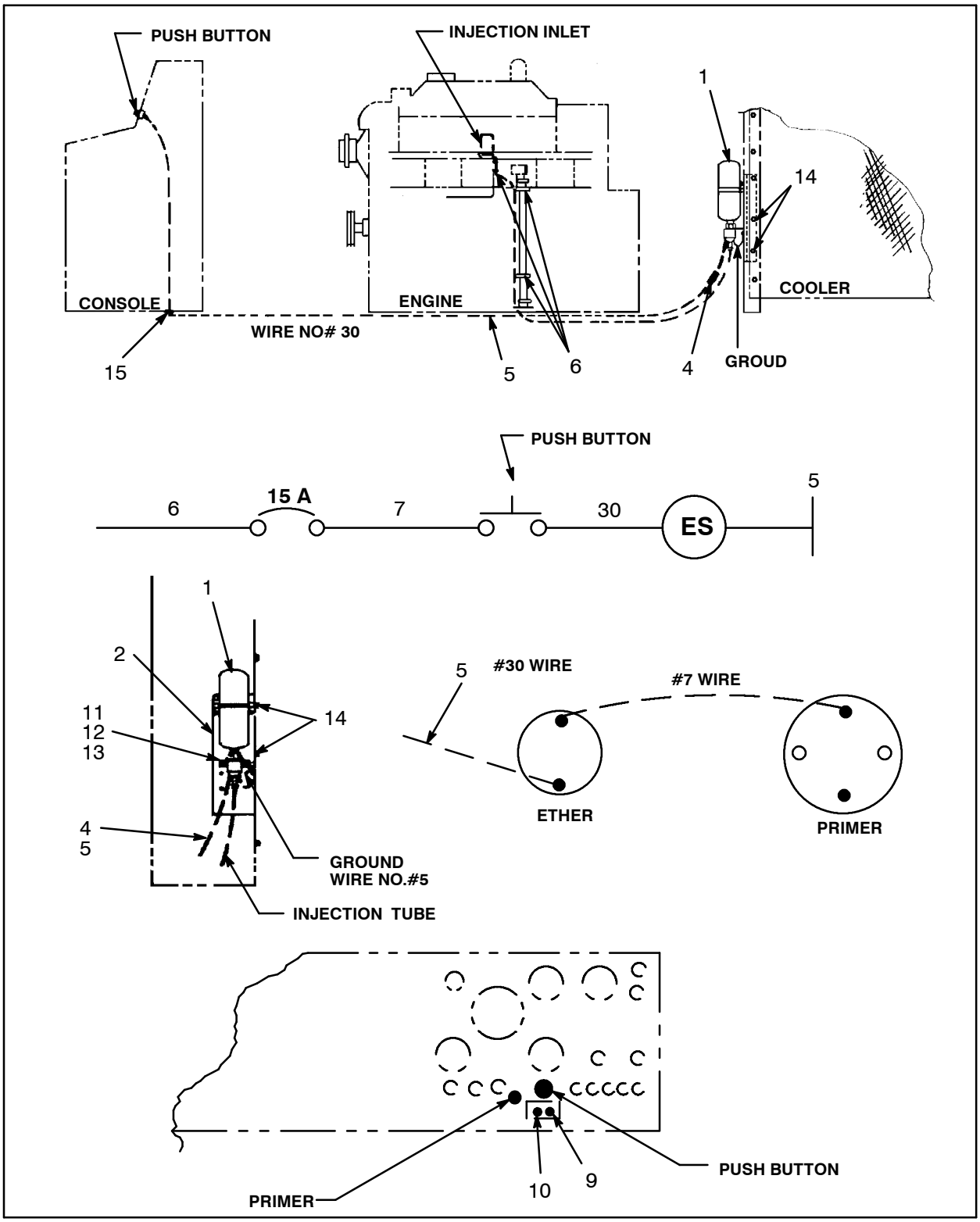

Figure 95 :INJECTION ASSEMBLY – ETHER

D57133258 REV 02

57133258 INJECTION ASSEMBLY–ETHER

REF.	PART NO.	QTY.	UNIT	DESCRIPTION
001	57047300	1	EA	STARTING KIT
	57301855	1	EA	● - VALVE,MEASURED SHOT
	57412132	1	EA	● - ELECT. PKG. –SWITCH
	57301863	1	EA	● - ATOMIZER–STARTING FLUID
002	57095853	1	EA	MOUNT, CYLINDER
004	57358830	224.00	IN	CONDUIT, 3/8” NYLON
005	50625938	224.00	IN	WIRE, 14AWG–GREEN
006	95748802	10	EA	TIE, CABLE
009	57095846	1	EA	NAMEPLATE
010	52231271	2	EA	METAL TACK
011	95929006	2	EA	SCREW, CAP–5/16–18 X 1
012	95929782	2	EA	NUT, HEX–5/16–18
013	95934303	2	EA	WASHER, LOCK–5/16 PLATED
014	95934816	3	EA	SCREW, CAP–1/4–20 X 1
015	57097792	1	EA	GROMMET, RUBBER
016	92473297	1	EA	CANNISTER

57472458 COMPRESSOR – HR2.5/1050 *

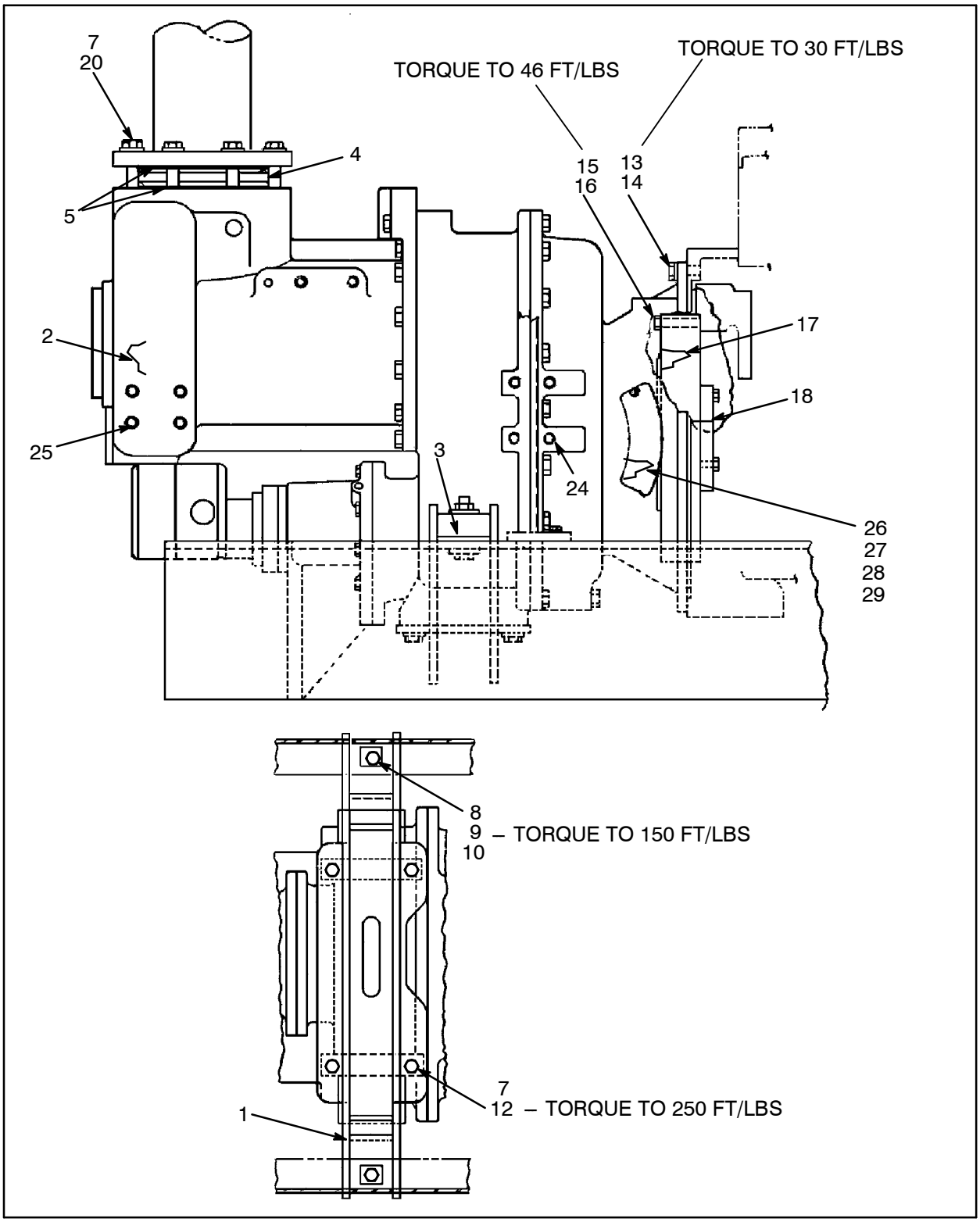

Figure 96 :COMPRESSOR – HR2.5/1050 *

D57405862 REV 01

WARNING: This manual contains data SPECIFIC to the drilling rig with serial number: 7341.

57472458 COMPRESSOR–HR2.5/1050 *

REF.	PART NO.	QTY.	UNIT	DESCRIPTION	
001	57170896	1	EA	SUPPORT, COMPRESSOR	
002	36020519	1	EA	AIREND–1050HR2.5	*(See figure 97)*
003	50518083	4	EA	SHIM SET	
004	57330292	1	EA	VALVE, BUTTERFLY, 8",CW	
005	95568960	2	EA	GASKET	
006	56946247	8	EA	SCREW, CAP–M20X2.5 X 80MM	
007	50759455	4	EA	WASHER, LOCK M20	
008	95104485	2	EA	SCREW,CAP	
009	95266409	2	EA	WASHER, BEVEL–5/8	
010	95080206	2	EA	NUT, HEX LOCK–5/8–11	
012	35272558	4	EA	SCREW, HEX–M20 X 45	
013	95104022	12	EA	SCREW, CAP–7/16–14 X 1.5	
014	95238143	12	EA	WASHER, LOCK–7/16	
015	95457610	12	EA	SCREW, CAP–3/8–16 X 3–1/4	
016	95937413	12	EA	WASHER, LOCK–3/8 PLATED	
017	36783710	1	EA	COUPLING, ASSY	
018	57405821	1	EA	BUSHING,QD,2–3/8" SHAFT	
020	95043162	8	EA	WASHER,LOCK–7/8	
024	57134140	8	EA	SCREW, HEX–M20 X 25	
025	57134157	7	EA	SCREW, HEX–M16 X 20	
026	52247657	2	EA	PLATE, COVER	
027	95928982	4	EA	SCREW, CAP–1/4–20 X 3/4	
028	95934766	4	EA	WASHER, LOCK–1/4 PLATED	
029	52263787	2	EA	GASKET	

36020519 AIREND – 1050HR2.5

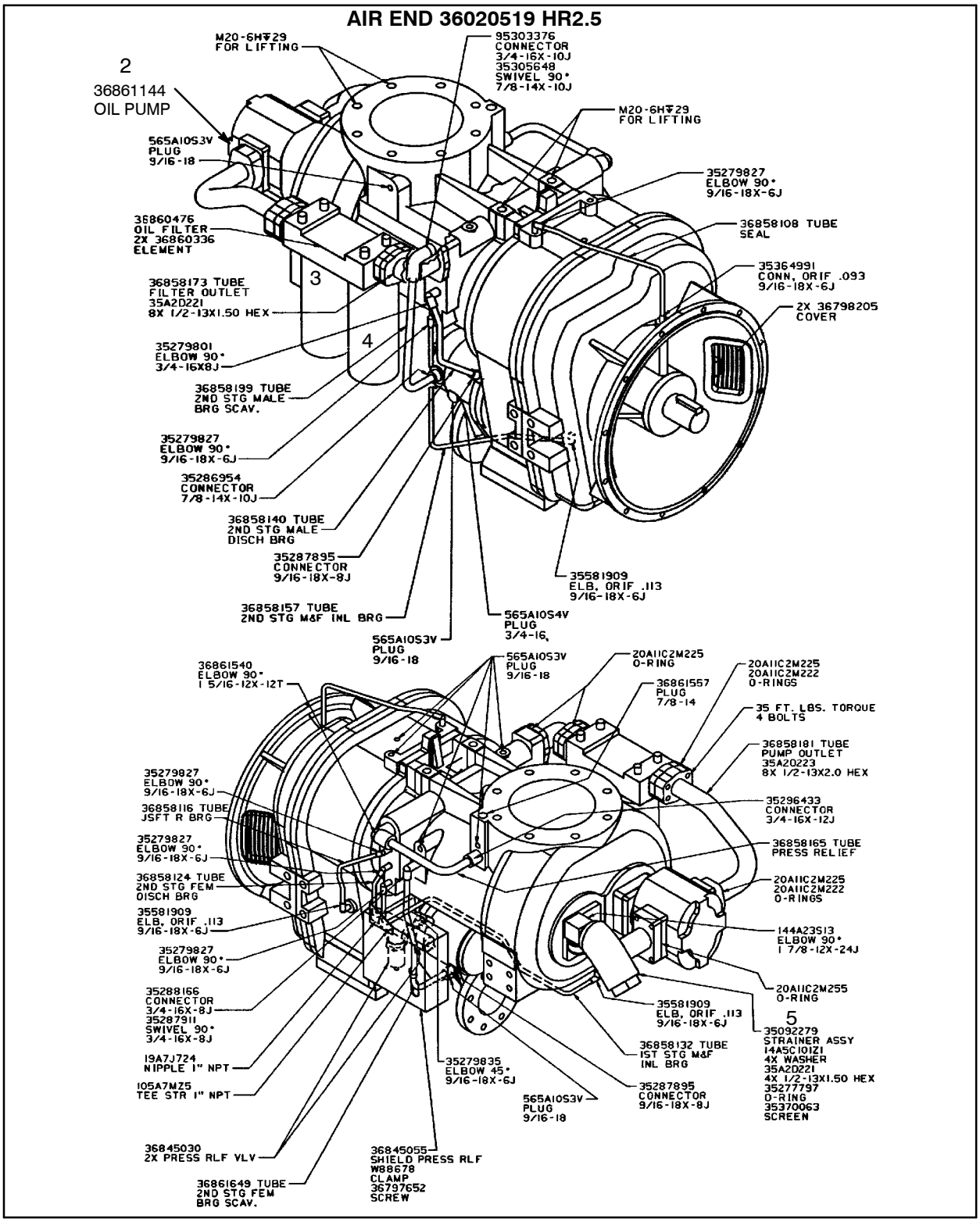

Figure 97 :AIREND – 1050HR2.5
M36861581

WARNING: This manual contains data SPECIFIC to the drilling rig with serial number: 7341.

36020519 AIREND – 1050HR2.5

REF.	PART NO.	QTY.	UNIT	DESCRIPTION
002	36861144	1	EA	PUMP, OIL
003	36860476	1	EA	FILTER, BASE
004	36860336	2	EA	ELEMENT, OIL FILTER
005	35092279	1	EA	STRAINER ASSY – HR2
	36751295	1	EA	● - STRAINER BODY
	35609098	1	EA	● - PLUG,STRAINER
	35370063	1	EA	● - ELEMENT,STRAINER – HR2
	35277797	1	EA	● - O – RING

57475675 PIPING, COMPRESSOR OIL COOLER

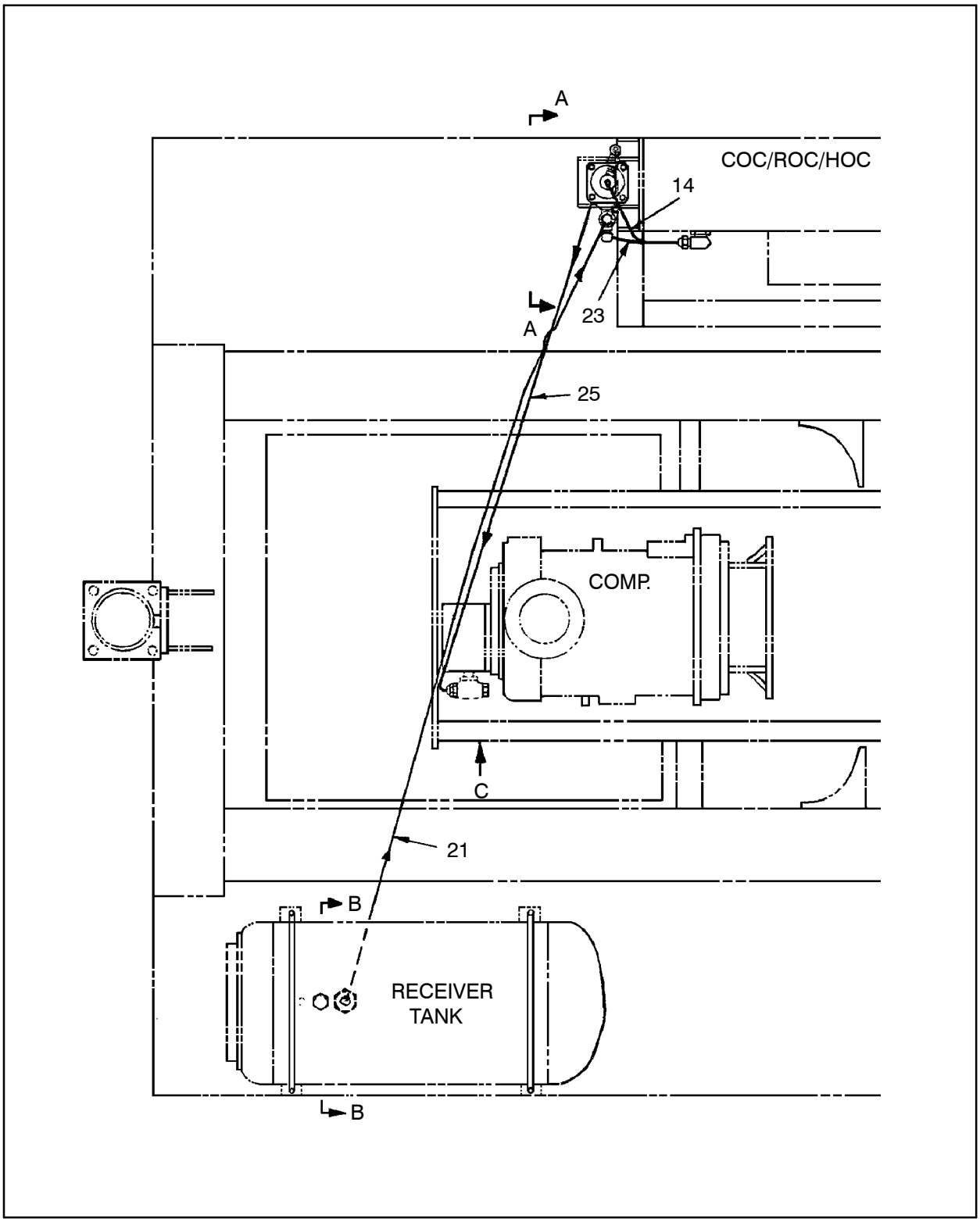

Figure 98 :PIPING, COMPRESSOR OIL COOLER
D57475675 REV 00

WARNING: This manual contains data SPECIFIC to the drilling rig with serial number: 7341.

57475675 PIPING, COMPRESSOR OIL COOLER

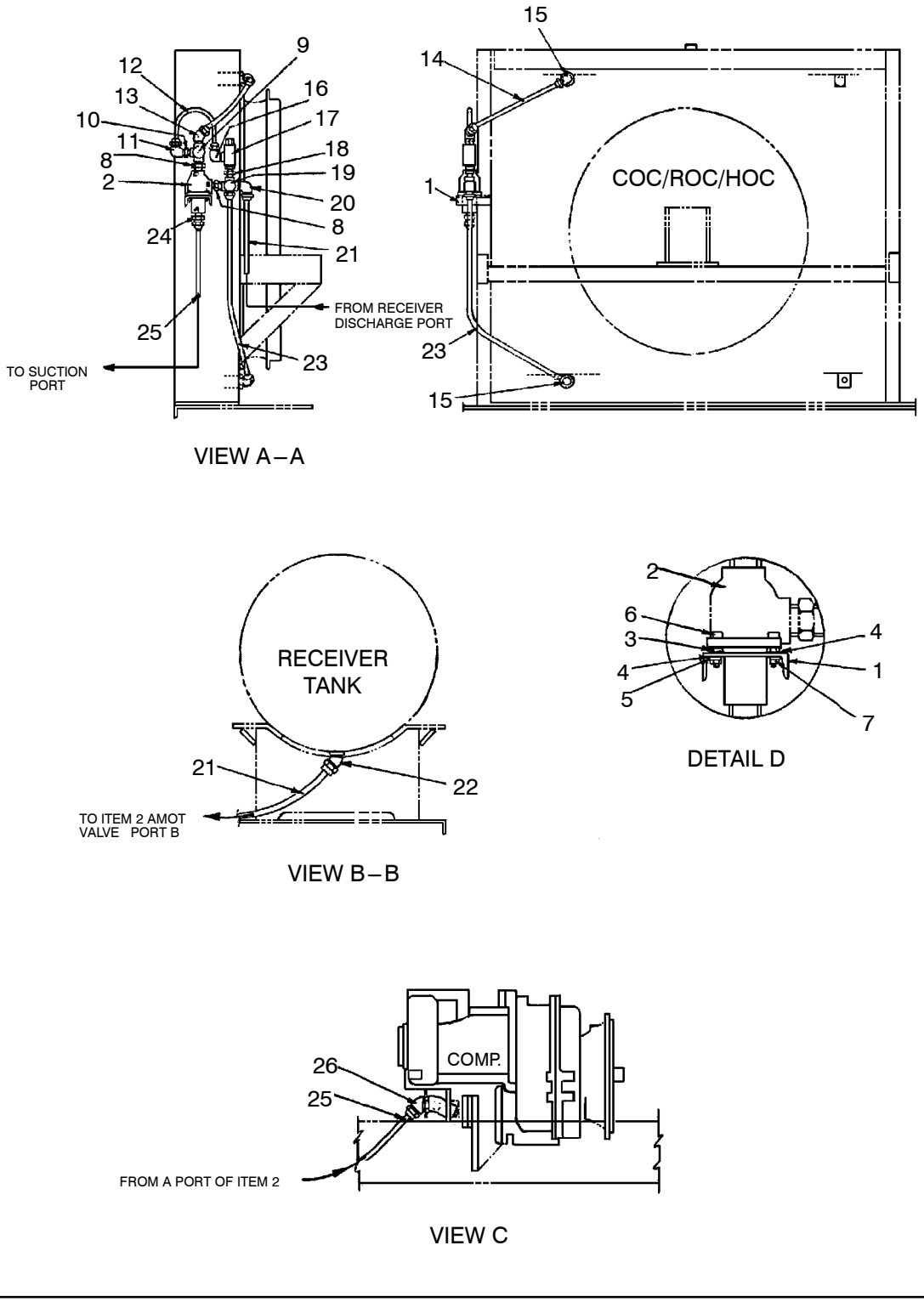

Figure 99 :PIPING, COMPRESSOR OIL COOLER
D57475675 REV 00

57475675 PIPING, COMPRESSOR OIL COOLER

PIPING, COC

TP: 57475675

REF.	PART NO.	QTY.	UNIT	DESCRIPTION
001	57139982	1	EA	BRACKET, MOUNTING–AMOT
002	57170821	1	EA	VALVE, TEMPERATURE BYPASS
	57170839	1	EA	● - ELEMENT
	95000477	1	EA	● - O–RING
	95022281	1	EA	● - O–RING
003	95201331	4	EA	NUT, HEX JAM–1/2–13
004	95064697	8	EA	WASHER, FLAT–1/2
005	95081824	4	EA	WASHER, LOCK–1/2
006	95055067	4	EA	SCREW CAP AH
007	95077798	4	EA	NUT, HEX–1/2–13
008	95365177	2	EA	FITTING, HYD
009	95678041	1	EA	FITTING, HYD
010	52226164	1	EA	FITTING, HYD
011	95219853	1	EA	FITTING, HYD
012	58206954	1	EA	HOSE ASSY
013	95279139	1	EA	FITTING, HYD
014	56948557	1	EA	HOSE ASSY
015	95387346	2	EA	ADAPTER
016	95219853	1	EA	FITTING, HYD
017	35321645	1	EA	VALVE, RELIEF–75 PSI
018	52226164	1	EA	FITTING, HYD
019	57080251	1	EA	FITTING, HYD
020	95279477	1	EA	FITTING, HYD
021	57077927	1	EA	HOSE ASSY
022	95387346	1	EA	ADAPTER
023	57029183	1	EA	HOSE ASSY
024	95208682	1	EA	FITTING, HYD
025	57337271	1	EA	HOSE ASSY
026	95387346	1	EA	ADAPTER

WARNING: This manual contains data SPECIFIC to the drilling rig with serial number: 7341.

57475675 PIPING, COMPRESSOR OIL COOLER

This page is blank.

57481962 PIPING, COMPRESSOR CONTROL

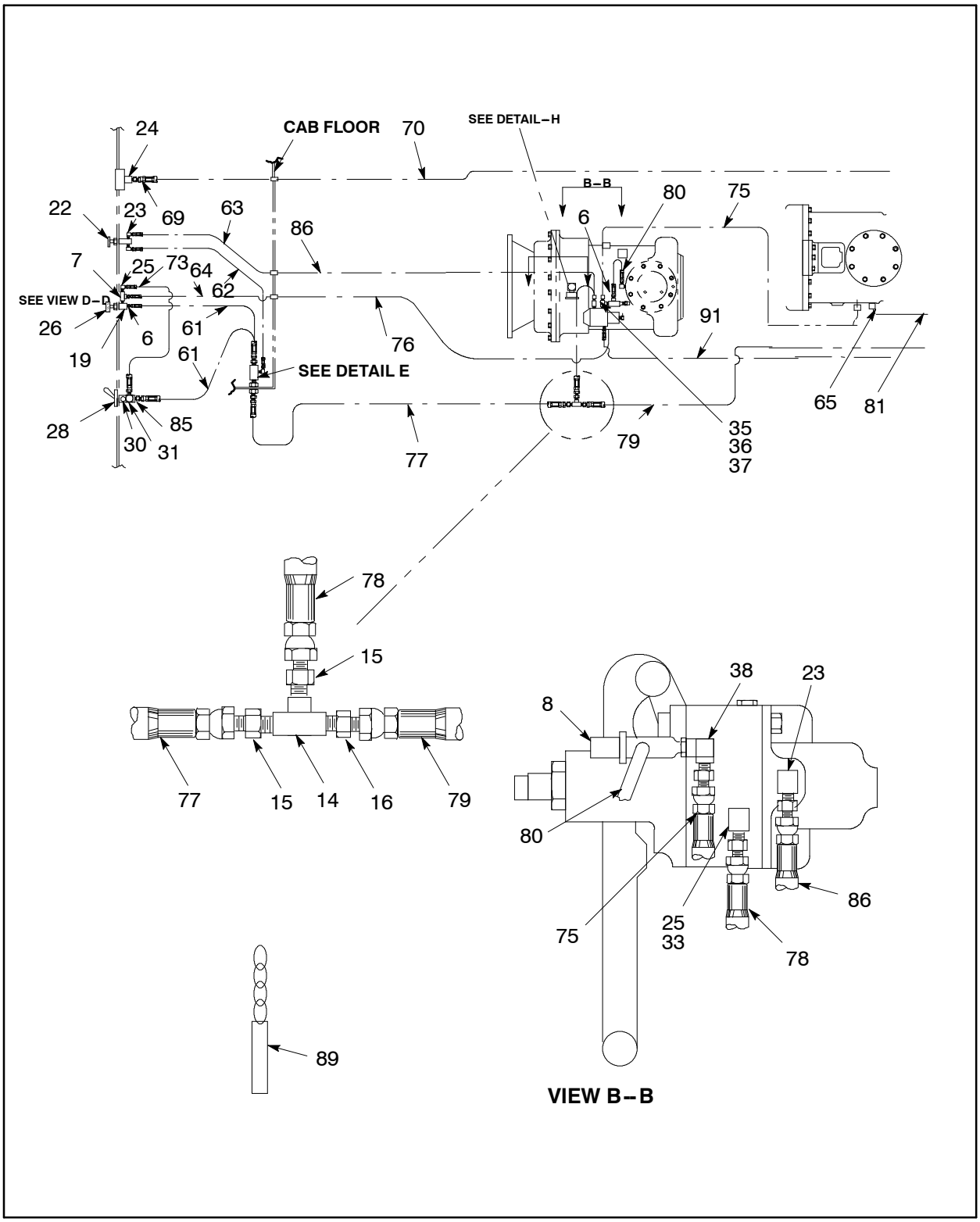

Figure 100 :PIPING, COMPRESSOR CONTROL
E57481962 REV 02

WARNING: This manual contains data SPECIFIC to the drilling rig with serial number: 7341.

57481962 PIPING, COMPRESSOR CONTROL

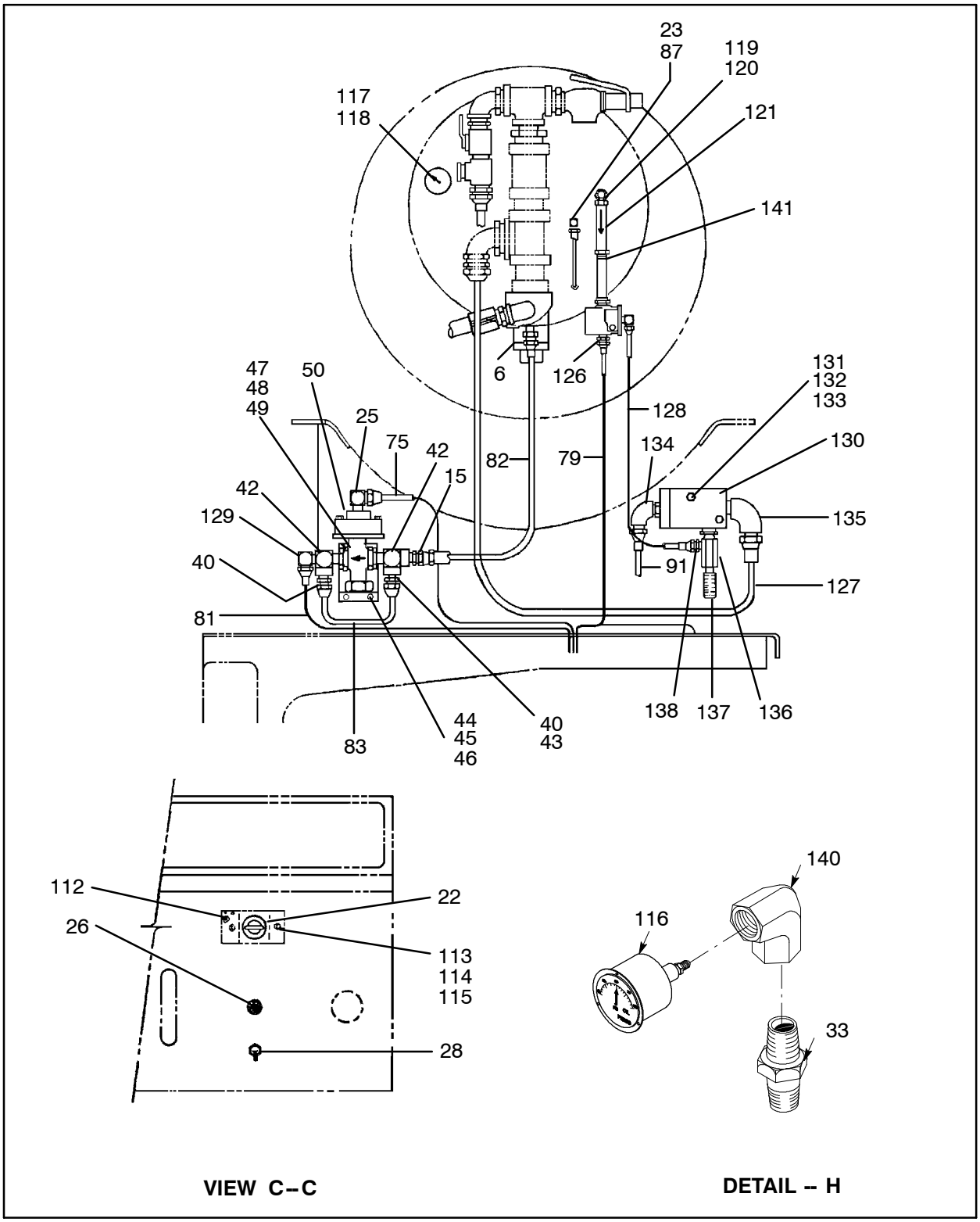

Figure 101 :PIPING, COMPRESSOR CONTROL
E57481962 REV 02

57481962 PIPING, COMPRESSOR CONTROL

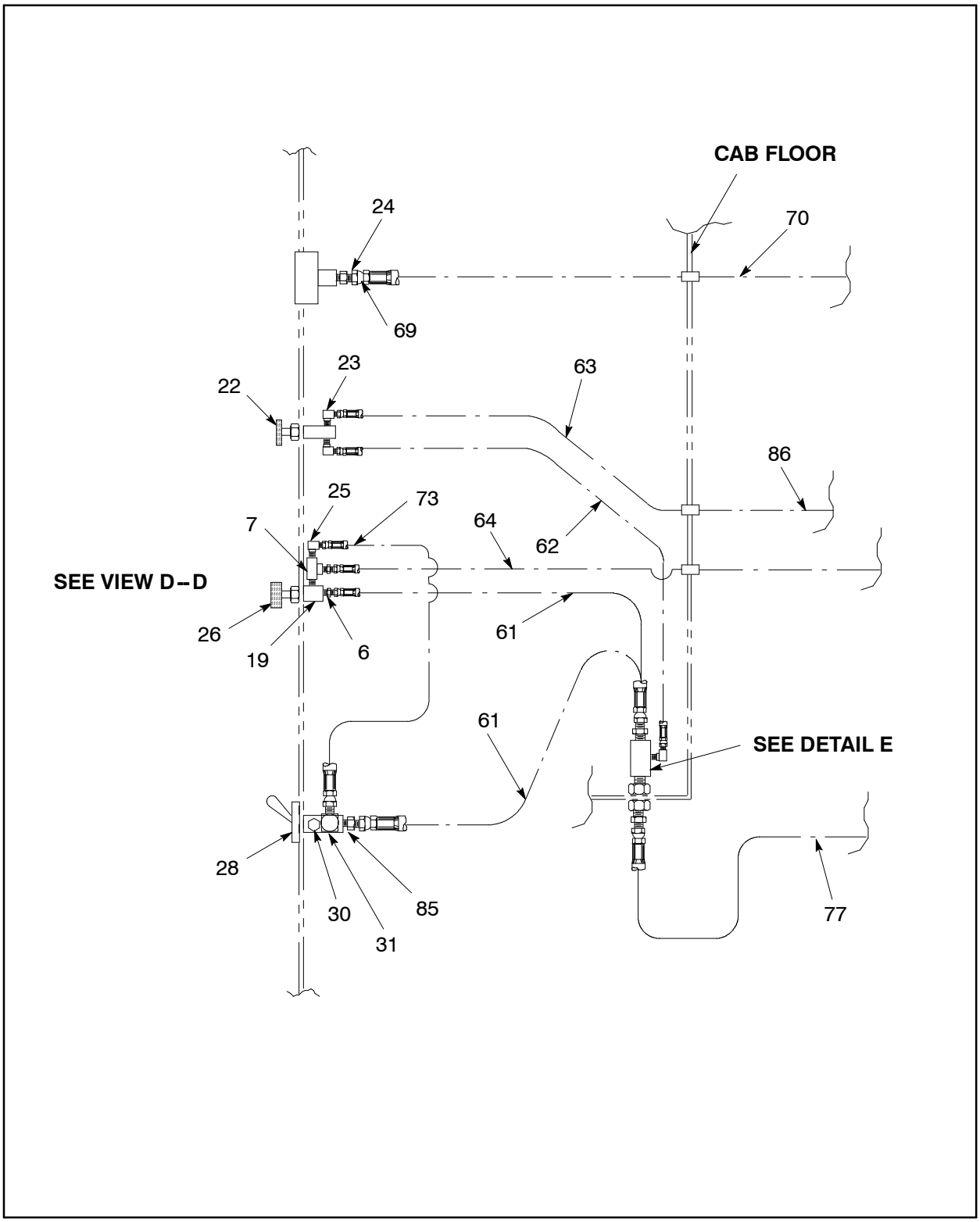

Figure 102 :PIPING, COMPRESSOR CONTROL
E57481962 REV 02

WARNING: This manual contains data SPECIFIC to the drilling rig with serial number: 7341.

57481962 PIPING, COMPRESSOR CONTROL

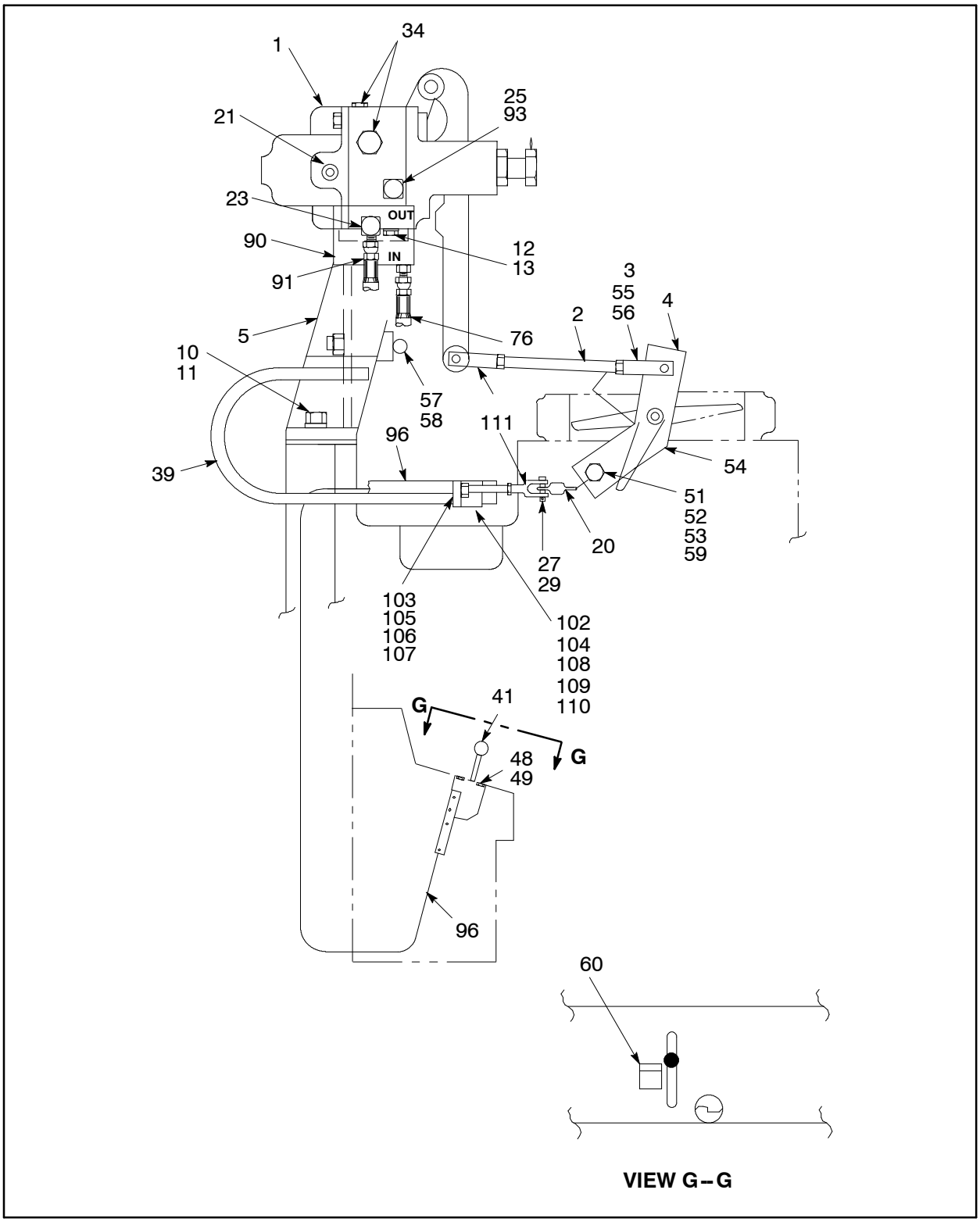

Figure 103 :PIPING, COMPRESSOR CONTROL
E57481962 REV 02

57481962 PIPING, COMPRESSOR CONTROL

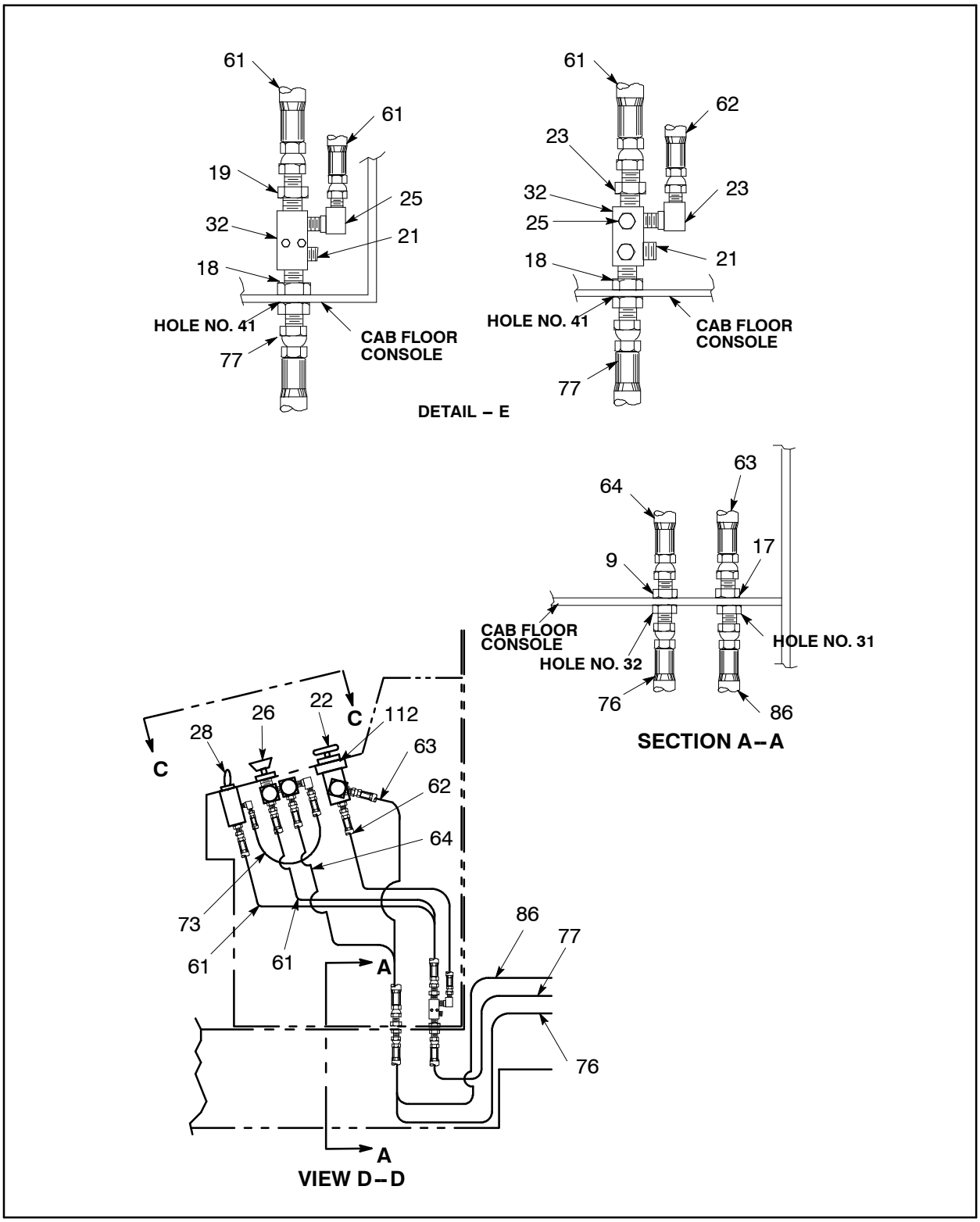

Figure 104 :PIPING, COMPRESSOR CONTROL
E57481962 REV 02

WARNING: This manual contains data SPECIFIC to the drilling rig with serial number: 7341.

57481962 PIPING, COMPRESSOR CONTROL

REF.	PART NO.	QTY.	UNIT	DESCRIPTION	
001	57093056	1	EA	REGULATOR, UL88	*(See figure 105)*
002	57396848	1	EA	TIE ROD–3/8 X 7 IN.	
003	52227733	2	EA	LINKAGE	
004	57471971	1	EA	LINK, BUTTERFLY VALVE	
005	57331688	1	EA	BRACKET, UL88 HR2.5	
006	95219713	2	EA	FITTING,HYD	
007	95341079	1	EA	FITTING,HYD	
008	57294936	1	EA	VALVE, RELIEF	
009	95364972	1	EA	FITTING,HYD	
010	35272558	2	EA	SCREW,HEX–M20 X 45	
011	50759455	2	EA	WASHER, LOCK M20	
012	52264926	2	AS	BOLT 12MM	
013	95081824	2	EA	WASHER,LOCK–1/2	
014	95264966	1	EA	FITTING,HYD	
015	95231031	1	EA	FITTING,HYD	
016	95219721	1	EA	FITTING,HYD	
017	95282422	1	EA	ADAPTER	
018	52187465	2	EA	FITTING,HYD	
019	95316972	2	EA	FITTING,HYD–NPT/JIC	
020	50699321	2.00	IN	CHAIN–BULK,3/16 COIL	
021	95033593	3	EA	PLUG,PIPE–1/4”SQUARE HEAD	
022	57196842	1	EA	REGULATOR	
	57197642	1	EA	● - REPAIR KIT, REGULATOR	
023	95293403	2	EA	FITTING,HYD	
024	95293296	1	EA	FITTING	
025	95209094	5	EA	FITTING,HYD	
026	52210986	1	EA	VALVE, NEEDLE	
027	95265336	1	EA	PIN,HINGE	
028	50258128	1	EA	VALVE,3–WAY	
029	95002663	3	EA	PIN,COTTER	
030	95049359	1	EA	PLUG,PIPE–1/8 HEX SOCKET	
031	95279451	1	EA	FITTING HYD	
032	52162138	1	EA	MANIFOLD	
033	95655064	3	EA	ADAPTER–INT NPT/O–RING	
034	95653317	2	EA	FITTING HYD	
035	95670535	1	EA	FITTING,TUBE–FEMALE PIPE	
036	95221065	1	EA	TEE,SERVICE	

57481962 PIPING, COMPRESSOR CONTROL

REF.	PART NO.	QTY.	UNIT	DESCRIPTION
037	95352738	1	EA	FITTING,HYD
038	95279493	1	EA	FITTING,HYD
039	57406969	1	EA	BAR, CABLE ANCHOR
040	95219721	2	EA	FITTING,HYD
041	57396061	2	EA	ACTUATOR, CONTROL CABLE
042	95264941	2	EA	FITTING HYD
043	35306984	1	EA	ORIFICE,.09
044	95920674	2	EA	SCREW, CAP 3/8–16X1
045	95937413	2	EA	LOCKWASHER–3/8 PLATED
046	52231818	1	EA	BRACKET
047	52231792	2	EA	U–BOLT
048	95931564	4	EA	NUT, HEX 1/4–20
049	95934766	4	EA	LOCKWASHER–1/4 PLATED
050	35316405	1	EA	VALVE,POPPET–ANTI RUMBLE
051	95920682	1	EA	SCREW,CAP–3/8–16 X 1–1/4
052	95922894	1	EA	NUT, HEX–3/8–16
053	95937413	1	EA	LOCKWASHER–3/8 PLATED
054	95033932	1	EA	PIN,ROLL
055	95076782	2	EA	NUT,HEX–3/8–24
056	95213401	2	EA	WASHER,LOCK–3/8 EXT.
057	50704147	1	EA	SCREW
058	95201331	1	EA	NUT,HEX JAM–1/2–13
059	95922233	1	EA	WASHER, FLAT 3/8
060	57397002	1	EA	DECAL, ENGINE STARTING
061	57043697	2	EA	HOSE ASSY
062	57043820	1	EA	HOSE ASSY
063	57043812	1	EA	HOSE ASSY
064	57097081	1	EA	HOSE ASSY
065	95329975	2	EA	FITTING,HYD
069	56964232	1	EA	HOSE ASSY
070	56964372	1	EA	HOSE ASSY
073	57034308	1	EA	HOSE ASSY
075	57095085	1	EA	HOSE ASSY
076	56973696	1	EA	HOSE ASSY
077	57042947	1	EA	HOSE ASSY
078	57496341	1	EA	HOSE ASSY
079	56994593	1	EA	HOSE ASSY

WARNING: This manual contains data SPECIFIC to the drilling rig with serial number: 7341.

57481962 PIPING, COMPRESSOR CONTROL

REF.	PART NO.	QTY.	UNIT	DESCRIPTION
079	58143421	1	EA	HOSE ASSY
080	57094948	1	EA	HOSE ASSY
081	57464950	1	EA	HOSE ASSY
082	57094948	1	EA	HOSE ASSY
083	57057440	1	EA	HOSE ASSY
085	95381158	1	EA	FITTING,HYD
086	56973670	1	EA	HOSE ASSY
086	58163833	1	EA	HOSE ASSY
087	95655072	1	EA	FITTING,HYD
089	57100091	1	EA	BLOCK,VALVE–BUTTERFLY
	57100117	1	EA	● - CHAIN,MACH.
	57100125	1	EA	● - BAR,SQ.
090	57163339	1	EA	VALVE,PILOT
091	56974587	1	EA	HOSE ASSY
093	95654448	1	EA	ELBOW–90DEG EXT/EXT NPT
096	57185886	1	EA	CABLE, CONTROL
102	50248871	1	EA	BRACKET
103	58059650	1	EA	CLAMP–CABLE
104	50248889	1	EA	SHIM
105	95073961	1	EA	SCREW MACH
106	95317673	2	EA	WASHER,LOCK–NO. 8
107	95076725	2	EA	NUT,HEX MACHINE–NO.8–32
108	95050993	2	EA	SCREW,MACH
109	95207403	2	EA	WASHER,LOCK–NO. 12
110	95086005	2	EA	NUT,HEX MACHINE–NO.12–24
111	52267473	1	EA	CLEVIS
112	58160458	1	EA	MTG BRKT
113	50401629	2	EA	BOLT
114	95934766	2	EA	LOCKWASHER–1/4 PLATED
115	95931564	2	EA	NUT, HEX 1/4–20
116	57112963	1	EA	GAUGE,PRESSURE–2.5 IN
117	57112971	1	EA	GAUGE,PRESSURE–2.5 IN
118	95655072	1	EA	FITTING,HYD
119	95775623	1	EA	FITTING,HYD
120	95317426	1	EA	ADAPTER–90DEG,EXT/EXT NPT
121	50622273	1	EA	VALVE, RELIEF
126	95219739	1	EA	FITTING,HYD

57481962 PIPING, COMPRESSOR CONTROL

REF.	PART NO.	QTY.	UNIT	DESCRIPTION
127	56957798	1	EA	HOSE ASSY
128	56954092	1	EA	HOSE ASSY
129	95279501	1	EA	FITTING
130	35849215	1	EA	VALVE, AUTO BLOWDOWN
131	95103875	2	EA	SCREW,CAP-3/8-16 X 3-1/4
132	95922894	2	EA	NUT, HEX-3/8-16
133	95937413	2	EA	LOCKWASHER-3/8 PLATED
134	95279493	1	EA	FITTING,HYD
135	95279402	1	EA	ELBOW-90DEG MALE 37DEG FL
136	35517234	1	EA	ORIFICE
137	35132299	1	EA	SILENCER
138	95263380	1	EA	FITTING,HYD-NPT/JIC
140	95279998	1	EA	FITTING,HYD
141	95219721	1	EA	FITTING,HYD

WARNING: This manual contains data SPECIFIC to the drilling rig with serial number: 7341.

57481962 PIPING, COMPRESSOR CONTROL

This page is blank.

57093056 REGULATOR, UL88

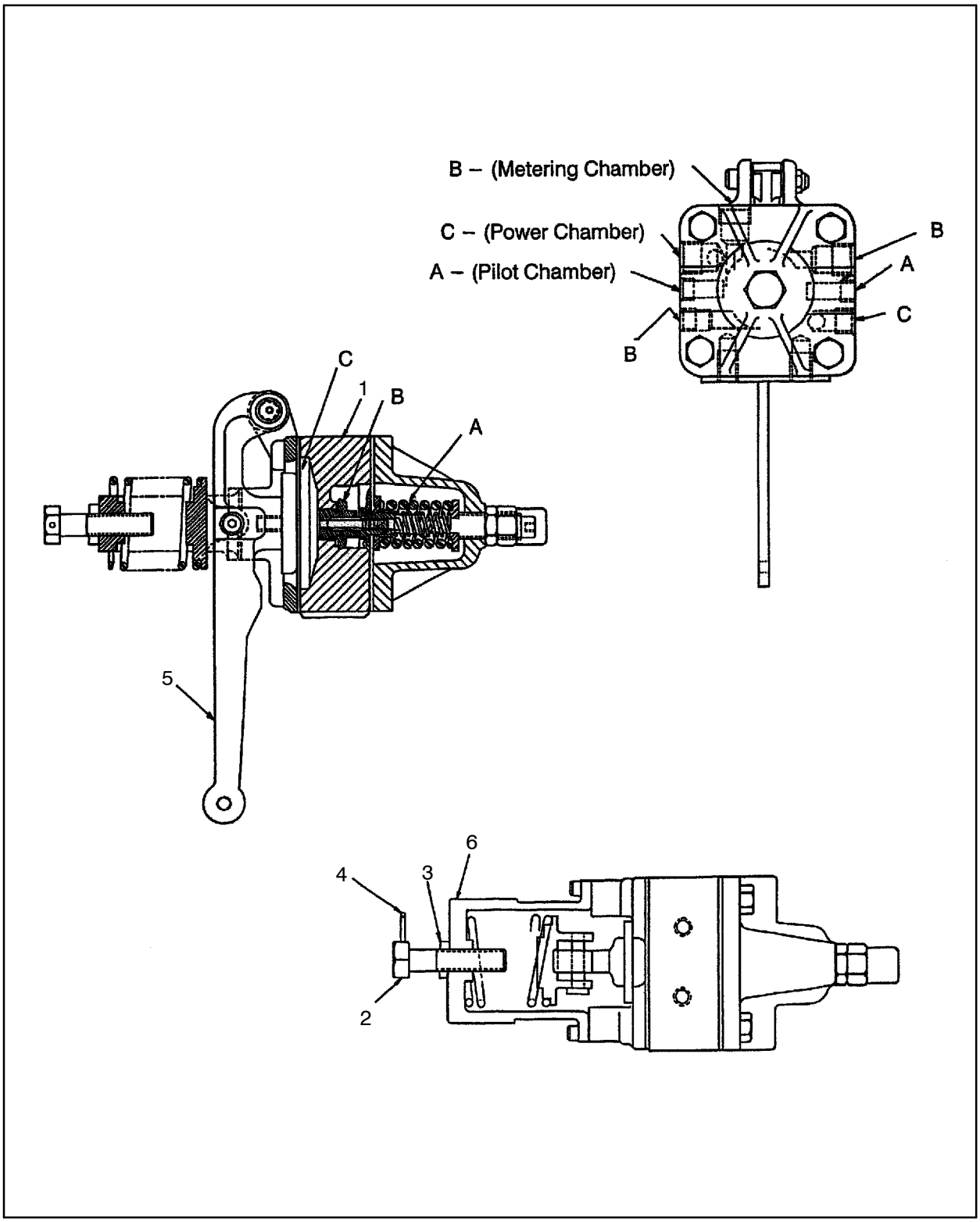

Figure 105 :REGULATOR, UL88
D57093056 REV03

WARNING: This manual contains data SPECIFIC to the drilling rig with serial number: 7341.

57093056 REGULATOR, UL88

REF.	PART NO.	QTY.	UNIT	DESCRIPTION
001	36720381	1	EA	REGULATOR–UL88
	57389108	1	AS	● - KIT,REPAIR,UL88
	35063643	1	EA	● - KIT,REPAIR
	57389116	1	EA	● - SEAT, VALVE, SST
002	50527308	1	EA	SCREW, STOP
003	95077798	1	EA	NUT,HEX–1/2–13
004	95033965	1	EA	PIN,ROLL
005	57098428	0	EA	ARM,LEVER
006	57098436	0	EA	SUPPORT,RANGE SPRING

57481442 PIPING, RECEIVER – HP

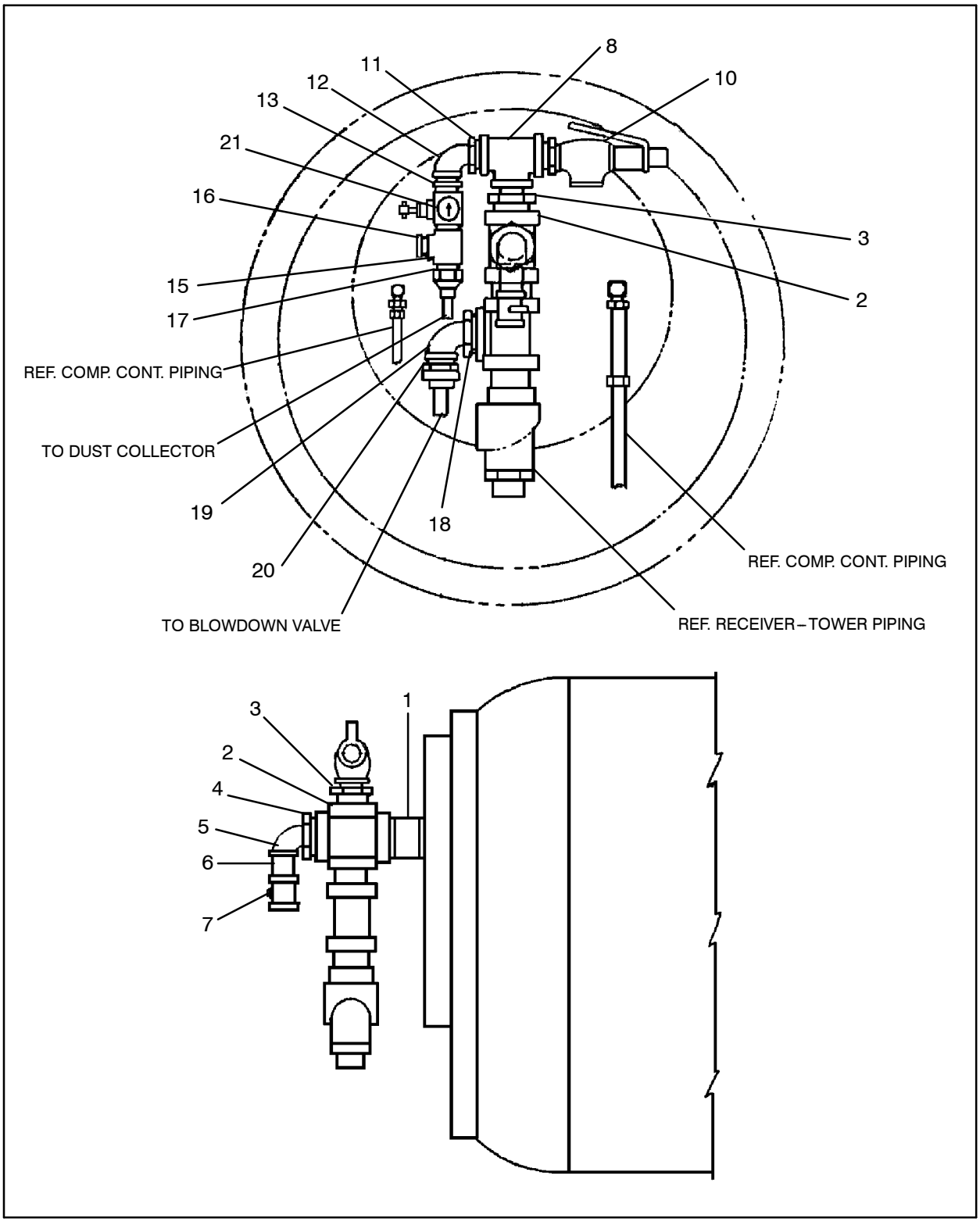

Figure 106 :PIPING, RECEIVER – HP

D57481442 REV 01

57481442 PIPING, RECEIVER – HP

REF.	PART NO.	QTY.	UNIT	DESCRIPTION
001	95243200	1	EA	NIPPLE PIPE
002	95230900	1	EA	CROSS
003	95038212	1	EA	BUSHING, PIPE – REDUCING
004	95037339	1	EA	BUSHING PIPE
005	95030771	1	EA	ELBOW
006	95097317	1	EA	NIPPLE, PIPE
007	52172723	1	EA	VALVE, MANUAL SHUTOFF
008	50338193	1	EA	TEE
010	50621986	1	EA	VALVE, SAFETY
011	95038188	1	EA	BUSHING
012	95238515	1	EA	ELBOW, 90 DEG STREET
013	95315214	1	EA	FITTING, HYD
015	95264941	1	EA	FITTING, HYD
016	95033619	1	EA	PLUG, PIPE – 1/2 SQ HEAD
017	95315214	1	EA	FITTING, HYD
018	95038261	1	EA	BUSHING, PIPE
019	95238515	1	EA	ELBOW, 90 DEG STREET
020	95279378	1	EA	FITTING, HYD
021	57442477	1	EA	REGULATOR, PRESSURE

57475667 PIPING, COMPRESSOR TO RECEIVER

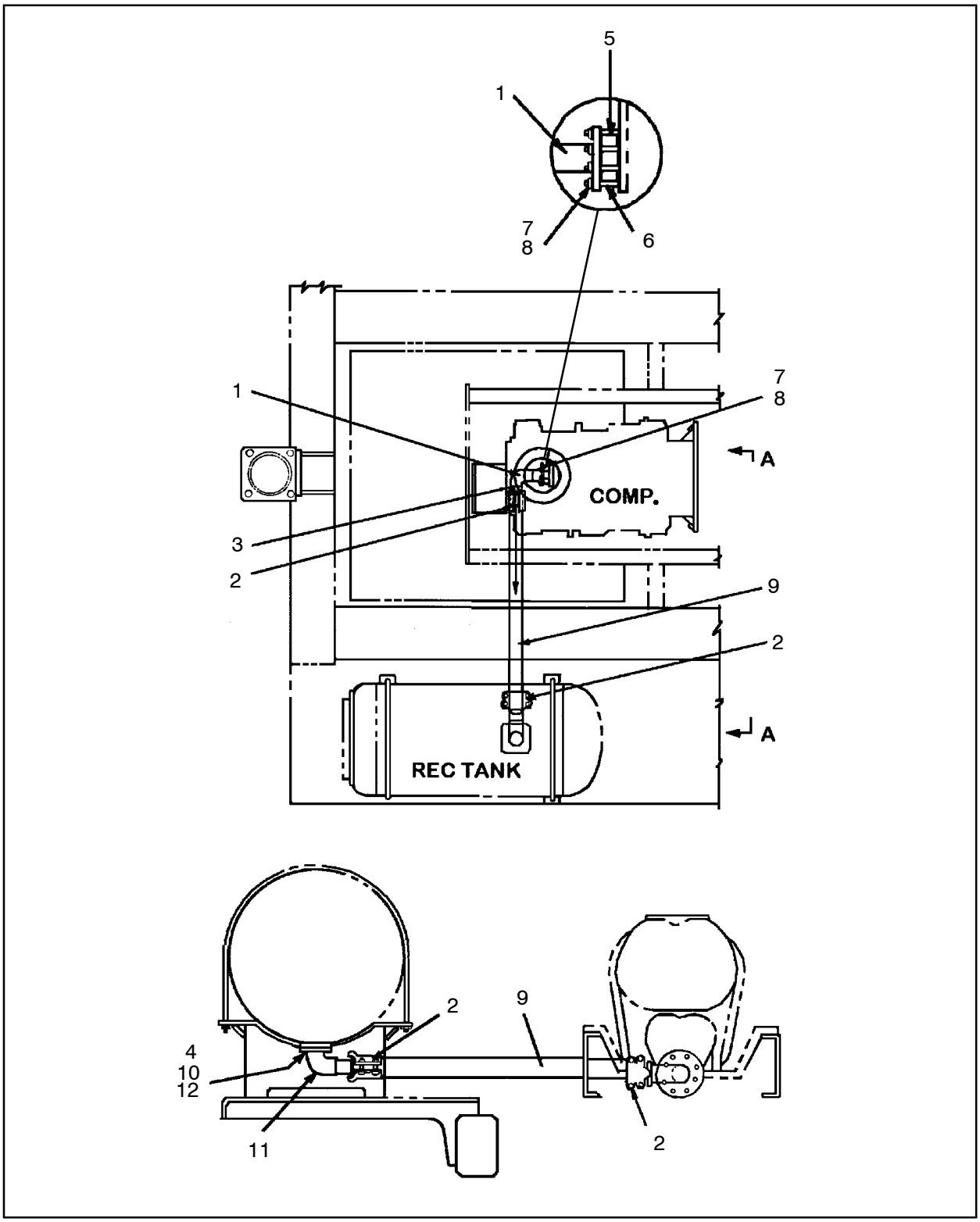

Figure 107 :PIPING, COMPRESSOR TO RECEIVER
D57475667 REV 00

WARNING: This manual contains data SPECIFIC to the drilling rig with serial number: 7341.

57475667 PIPING, COMPRESSOR TO RECEIVER

REF.	PART NO.	QTY.	UNIT	DESCRIPTION
001	57474710	1	EA	PIPE,COMPR.DISCHG–N14/HR2
002	50428564	2	EA	CLAMP, HOSE–3
003	95033619	1	EA	PLUG, PIPE–1/2 SQ HEAD
004	95285532	4	EA	SCREW,CAP–5/8–11 X 1–1/2
005	36843720	1	EA	VALVE, CHECK
006	95225116	2	EA	GASKET RING
007	35292135	8	EA	SCREW, CAP–METRIC
008	95081790	8	EA	WASHER, LOCK–5/8
009	57137986	34.50	IN	HOSE, AIR–U48 BULK
010	95081790	4	EA	WASHER, LOCK–5/8
011	57085128	1	EA	STEM,HOSE
012	50412899	1	EA	GASKET

57471898 RECEIVER INSTL–HORIZ TNK*

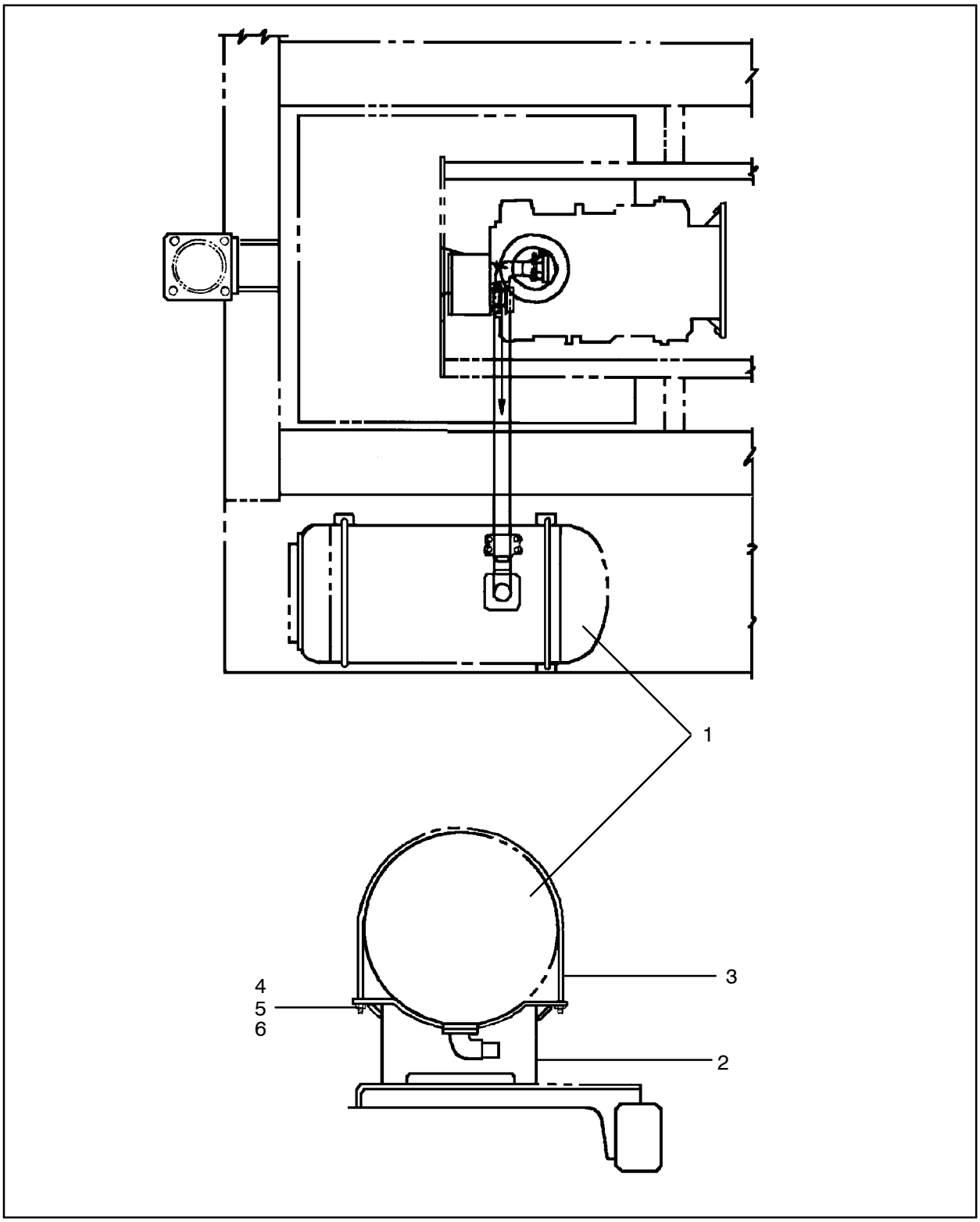

Figure 108 :RECEIVER INSTL–HORIZ TNK*

D57471898 REV05

57471898 RECEIVER INSTL–HORIZ TNK*

REF.	PART NO.	QTY.	UNIT	DESCRIPTION	
001	57532970	1	AS	RECEIVER ASSY,HORIZONTAL	*(See figure 109)*
002	52147550	2	EA	SUPPORT, REC	
003	50424134	2	EA	U–BOLT	$
004	95081824	4	EA	WASHER, LOCK–1/2	
005	95077798	4	EA	NUT, HEX–1/2–13	
006	95081667	4	EA	WASHER, FLAT–1/2	

57532970 RECEIVER ASSY,HORIZONTAL

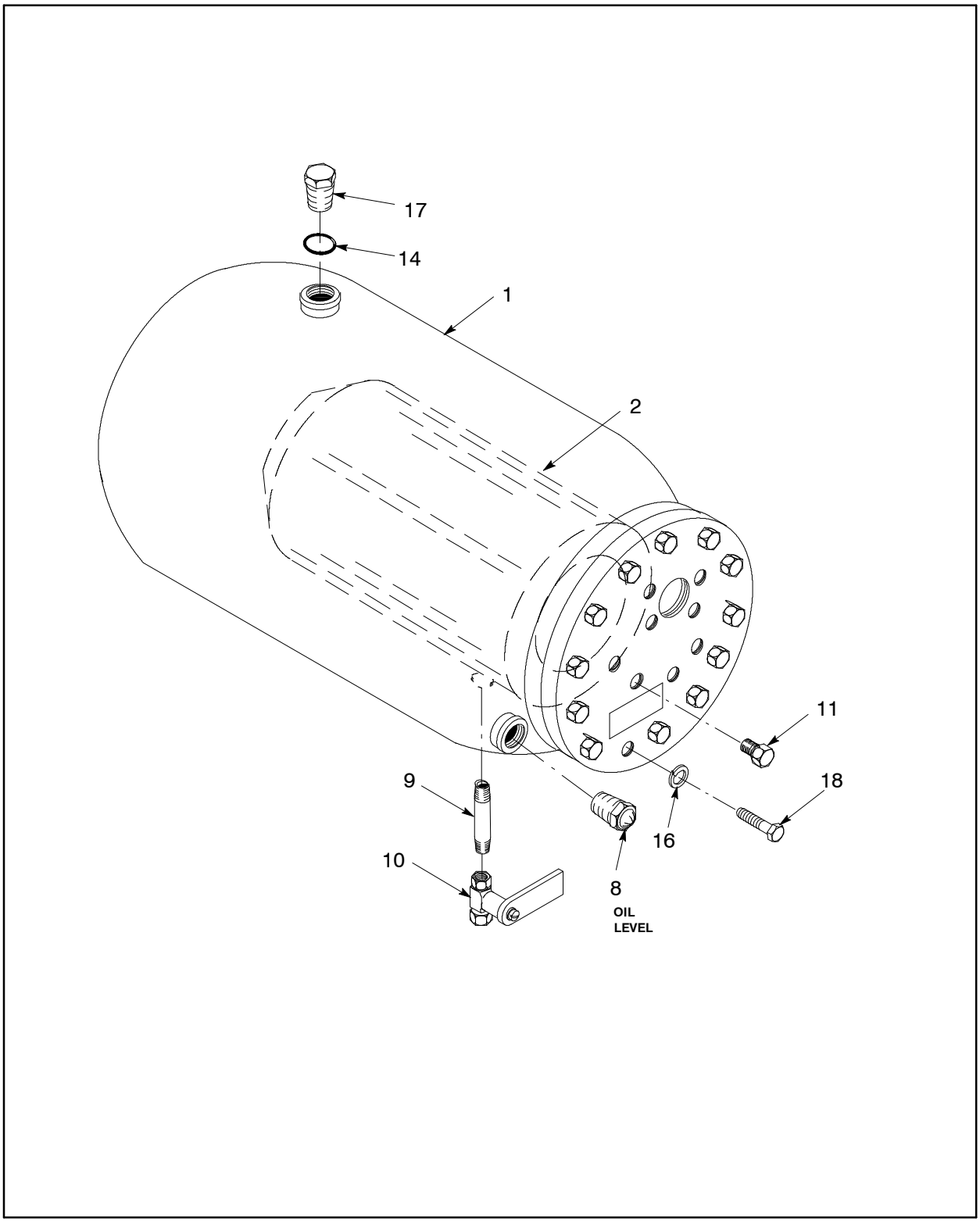

Figure 109 :RECEIVER ASSY,HORIZONTAL
D57532970 REV 00

WARNING: This manual contains data SPECIFIC to the drilling rig with serial number: 7341.

57532970 RECEIVER ASSY,HORIZONTAL

REF.	PART NO.	QTY.	UNIT	DESCRIPTION
001	57159212	1	EA	TANK, OIL SEPARATOR
001	52202058	38.00	GL	OIL, COMPRESSOR
002	57101636	1	EA	ELEMENT, OIL SEPARATOR
----------	57212409	1	EA	● - GASKET–SEPR ELEMENT
008	35516749	1	EA	GAUGE, SIGHT
009	95243234	1	EA	NIPPLE, PIPE
010	50829605	1	EA	VALVE, BALL–1/2”
011	95653317	3	EA	FITTING, HYD
014	95042289	1	EA	O–RING
016	95081808	18	EA	WASHER, LOCK–3/4
017	30395610	1	EA	PLUG $
018	95104667	18	EA	SCREW, CAP–3/4–10 X 3

57475683 PIPING, RECEIVER TO TOWER

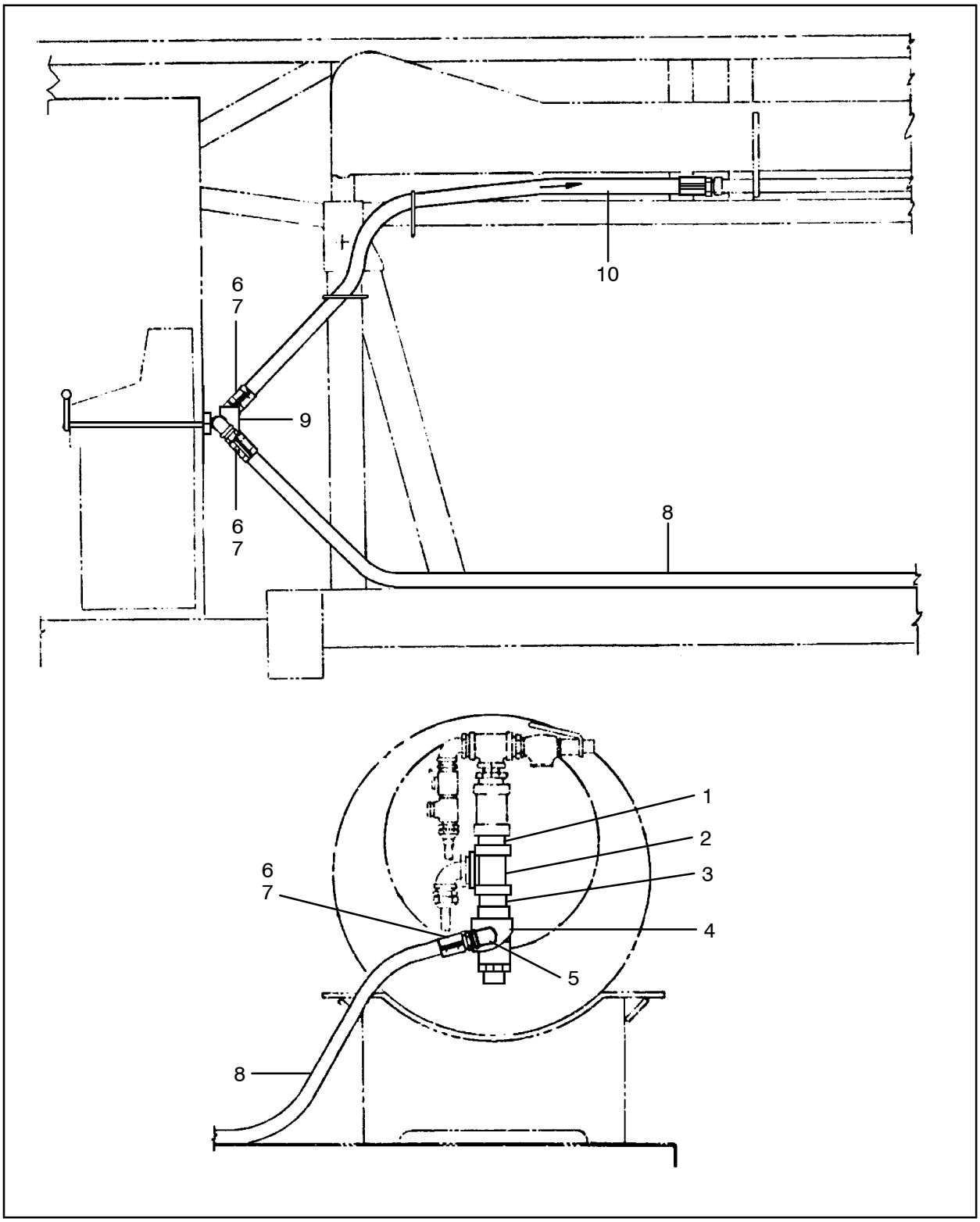

Figure 110 :PIPING, RECEIVER TO TOWER
E57475683 REV 00

WARNING: This manual contains data SPECIFIC to the drilling rig with serial number: 7341.

57475683 PIPING, RECEIVER TO TOWER

REF.	PART NO.	QTY.	UNIT	DESCRIPTION	
001	95097291	1	EA	NIPPLE PIPE	
002	95006599	1	EA	TEE,PIPE–2 NPT	
003	95243093	1	EA	NIPPLE PIPE	
004	57391047	1	EA	VALVE, MIN. PRESSURE	
005	95238523	1	EA	ELBOW STREET	
006	50023910	3	EA	STEM	
007	50743731	3	EA	CLAMP, HOSE	
008	95313961	305.00	IN	HOSE,AIR–R32 BULK	
009	52223666	1	AS	THROTTLE VALVE	*(See figure 111)*
010	95313961	134.00	IN	HOSE,AIR–R32 BULK	

52223666 THROTTLE VALVE

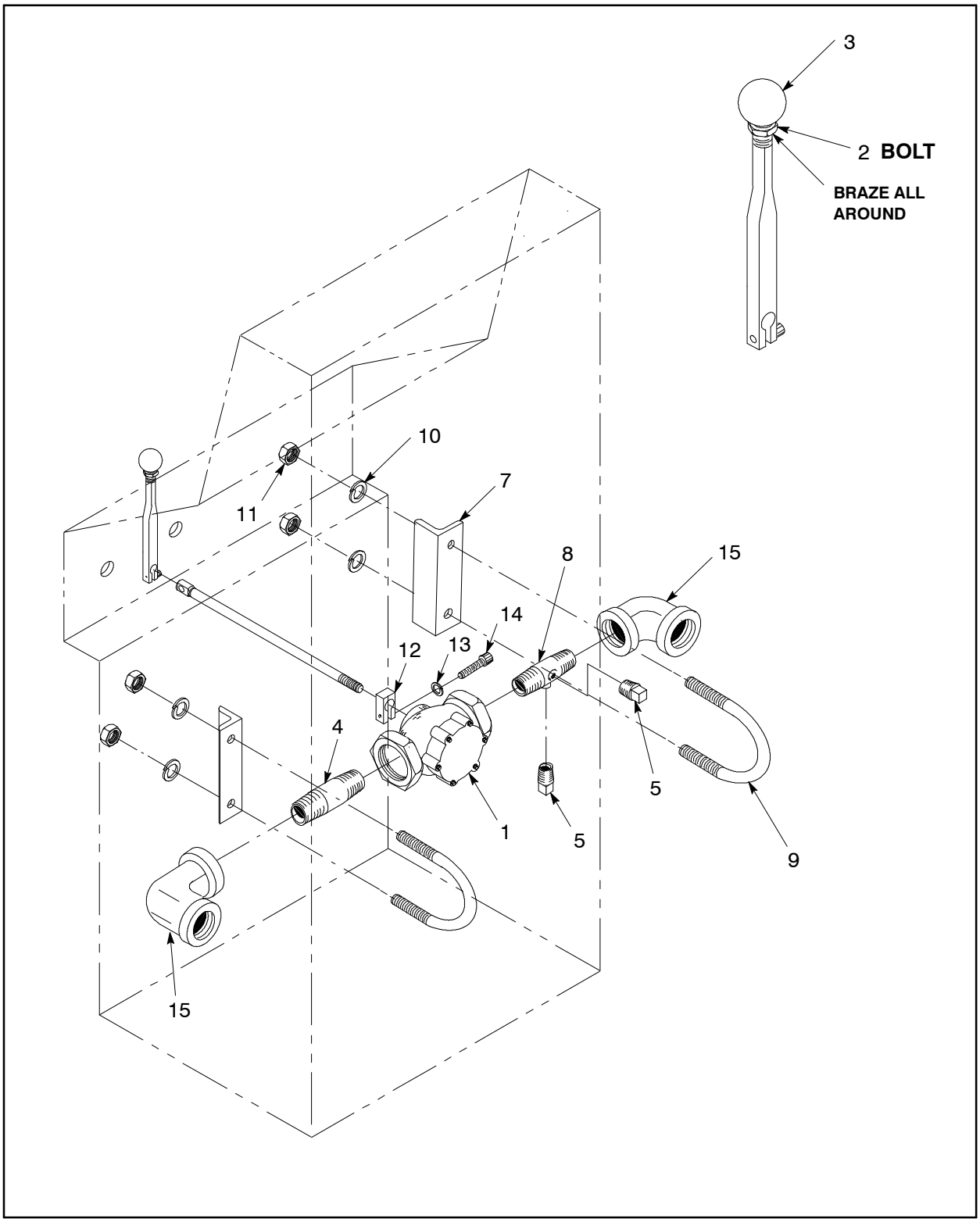

Figure 111 :THROTTLE VALVE
V52223666 REV 03

WARNING: This manual contains data SPECIFIC to the drilling rig with serial number: 7341.

52223666 THROTTLE VALVE

REF.	PART NO.	QTY.	UNIT	DESCRIPTION
001	52158714	1	EA	2–WAY AIR VL
002	95104147	1	EA	SCREW, CAP–1/2–13 X 1
003	50135888	1	EA	KNOB
004	95097333	1	EA	NIPPLE
005	95033593	2	EA	PLUG, PIPE–1/4 SQ HEAD
007	50626977	2	EA	BRACKET–THRTLE VLV MTG
008	52223690	1	EA	MANIFOLD
009	50195718	2	EA	U BOLT
010	95937413	4	EA	WASHER, LOCK–3/8 PLATED
011	95922894	4	EA	NUT, HEX–3/8–16
012	50058072	1	EA	VALVE STOP D
013	95934857	1	EA	SCREW, CAP–1/4–20 X 1–1/4
014	95934766	1	EA	WASHER, LOCK–1/4 PLATED
015	95031316	2	EA	ELBOW, PIPE

57391120 WRENCH & PIPING INSTALL

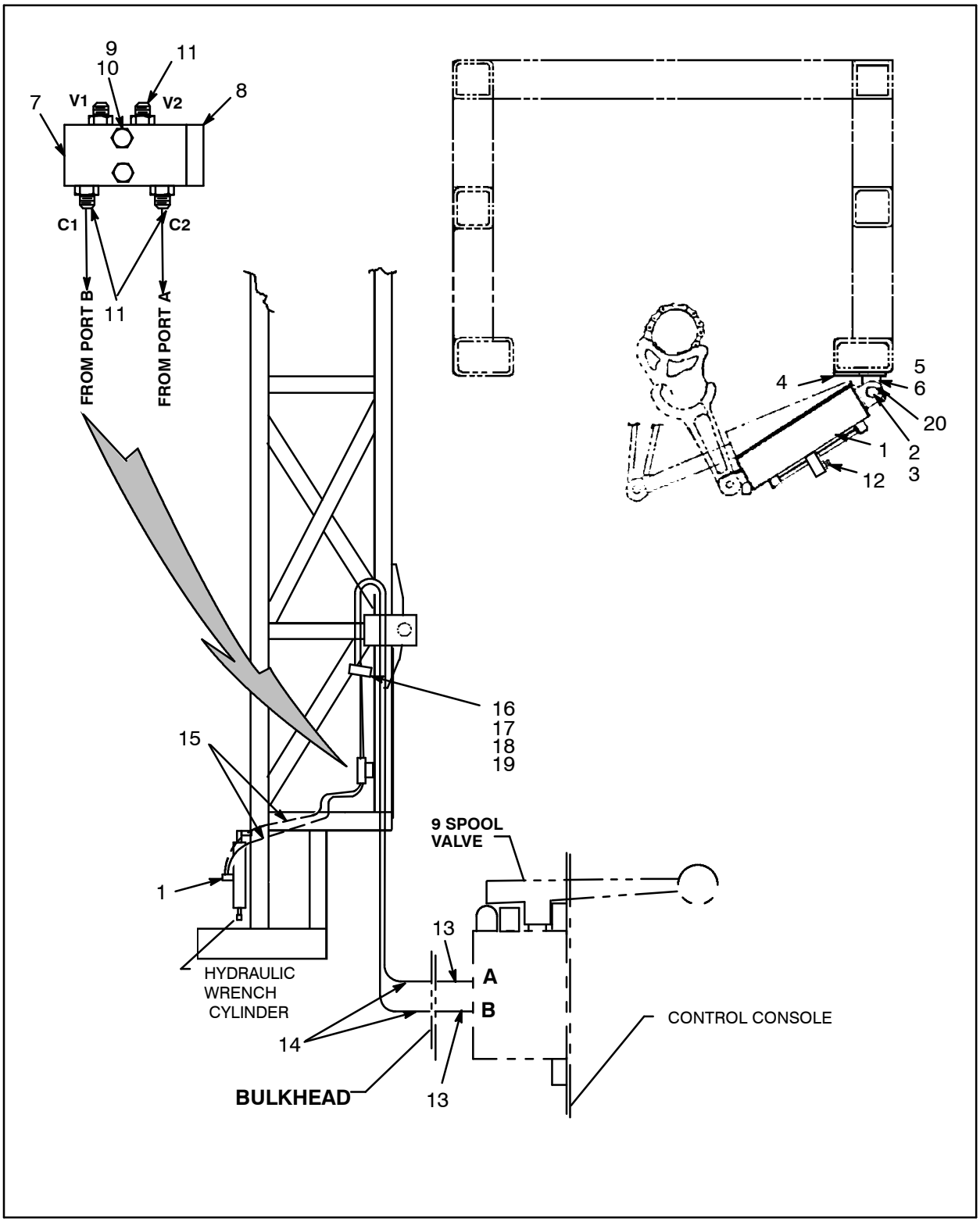

Figure 112 :WRENCH & PIPING INSTALL
E57391120 REV 02

WARNING: This manual contains data SPECIFIC to the drilling rig with serial number: 7341.

57391120 WRENCH & PIPING INSTALL

REF.	PART NO.	QTY.	UNIT	DESCRIPTION	
001	57039638	1	EA	CYLINDER, HYDRAULIC	
	57039810	1	EA	● - KIT,SEAL	*(See figure 113)*
	57012676	1	EA	● - PLUG, NYLON	
	57012684	1	EA	● - SCREW, SET	
002	95342028	1	EA	PIN, HINGE	
003	95093381	2	EA	PIN,COTTER–3/16 X 1–3/4	
004	57391104	1	EA	BRACKET–WRENCH CYL MOUNT	
005	57391112	1	EA	PIVOT – WRENCH CYL MOUNT	
006	52233954	1	EA	CYL RETAINER	
007	50462944	1	EA	VALVE,CHECK–DBL PILOT OP.	
008	52208691	1	EA	MTG BRKT	
009	95044038	2	EA	SCREW CAP	
010	95934303	2	EA	LOCKWASHER–5/16 PLATED	
011	95419594	4	EA	FITTING,HYD	
012	95371258	2	EA	FITTING,HYD	
013	57004020	2	EA	HOSE ASSY	
014	56964232	2	EA	HOSE ASSY	
015	57209322	2	EA	HOSE ASSY.	
016	50034826	4	EA	CLAMP, HOSE	
017	95931564	2	EA	NUT, HEX 1/4–20	
018	95934766	2	EA	LOCKWASHER–1/4 PLATED	
019	95105466	2	EA	SCREW,CAP–HEX,1/4–20 X1.5	
020	95201281	1	EA	FITTING,LUBE	

57039810 KIT,SEAL

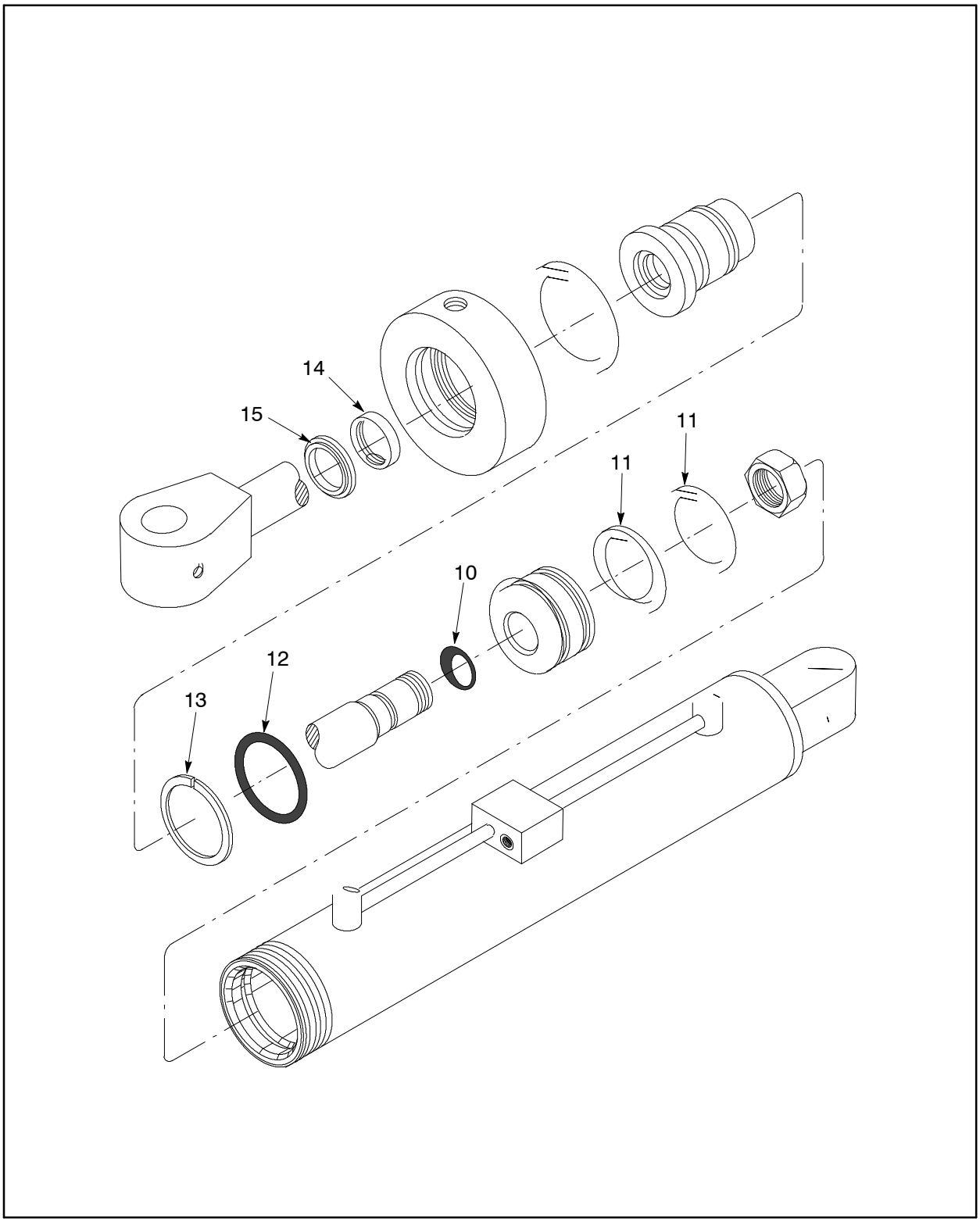

Figure 113 :KIT,SEAL
E57039638 REV 00

57039810 KIT,SEAL

REF.	PART NO.	QTY.	UNIT	DESCRIPTION
010	57326795	1	EA	O-RING
011	57326803	2	EA	U-CUP
012	57224081	1	EA	O-RING
013	57163529	1	EA	RING, BACK-UP
014	57163453	1	EA	U-CUP
015	59322677	1	EA	WIPER

57450496 DRIVE, MAIN HYDRAULIC – CLOSED LOOP

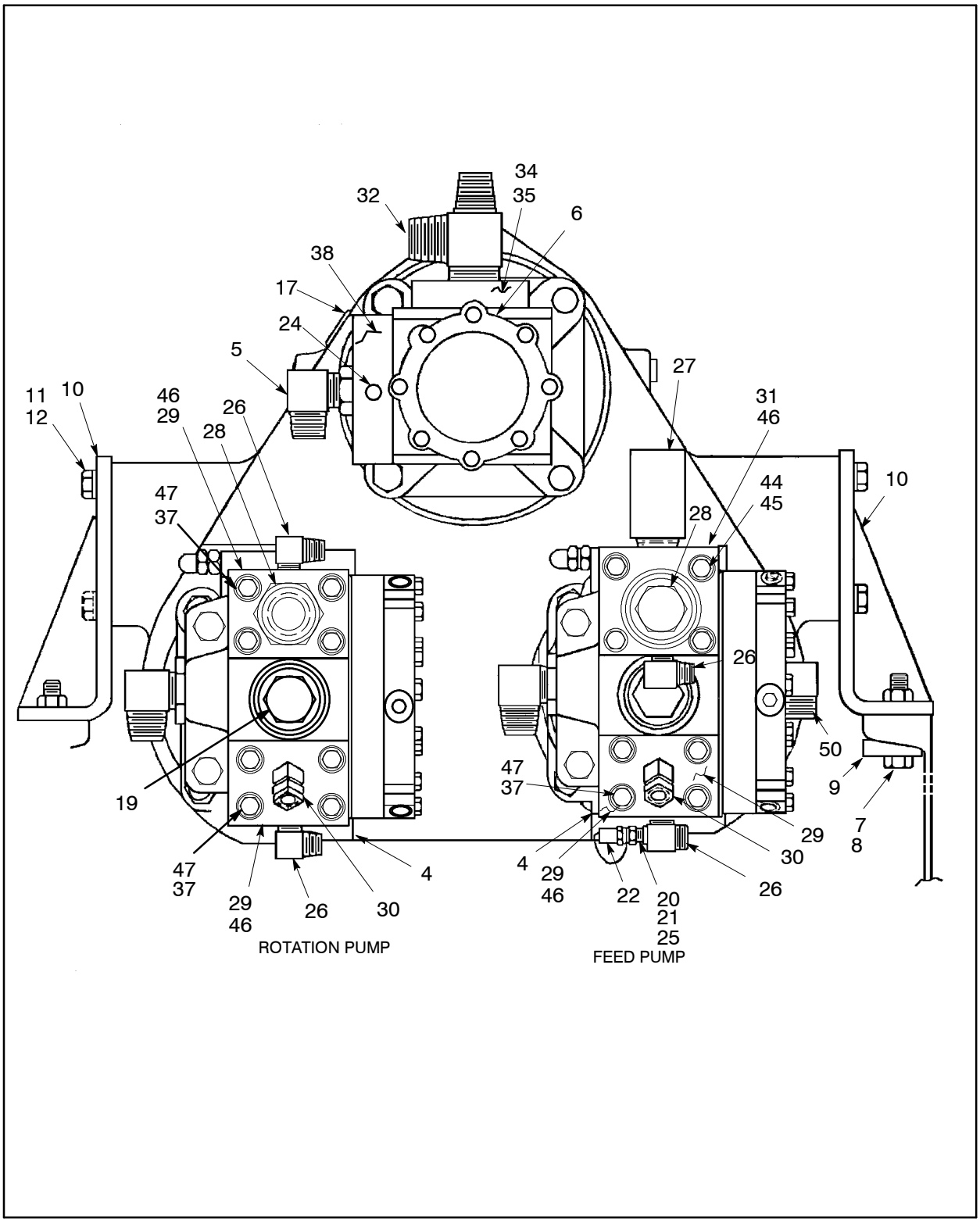

Figure 114 :DRIVE, MAIN HYDRAULIC – CLOSED LOOP
E57450496 REV04

WARNING: This manual contains data SPECIFIC to the drilling rig with serial number: 7341.

57450496 DRIVE, MAIN HYDRAULIC – CLOSED LOOP

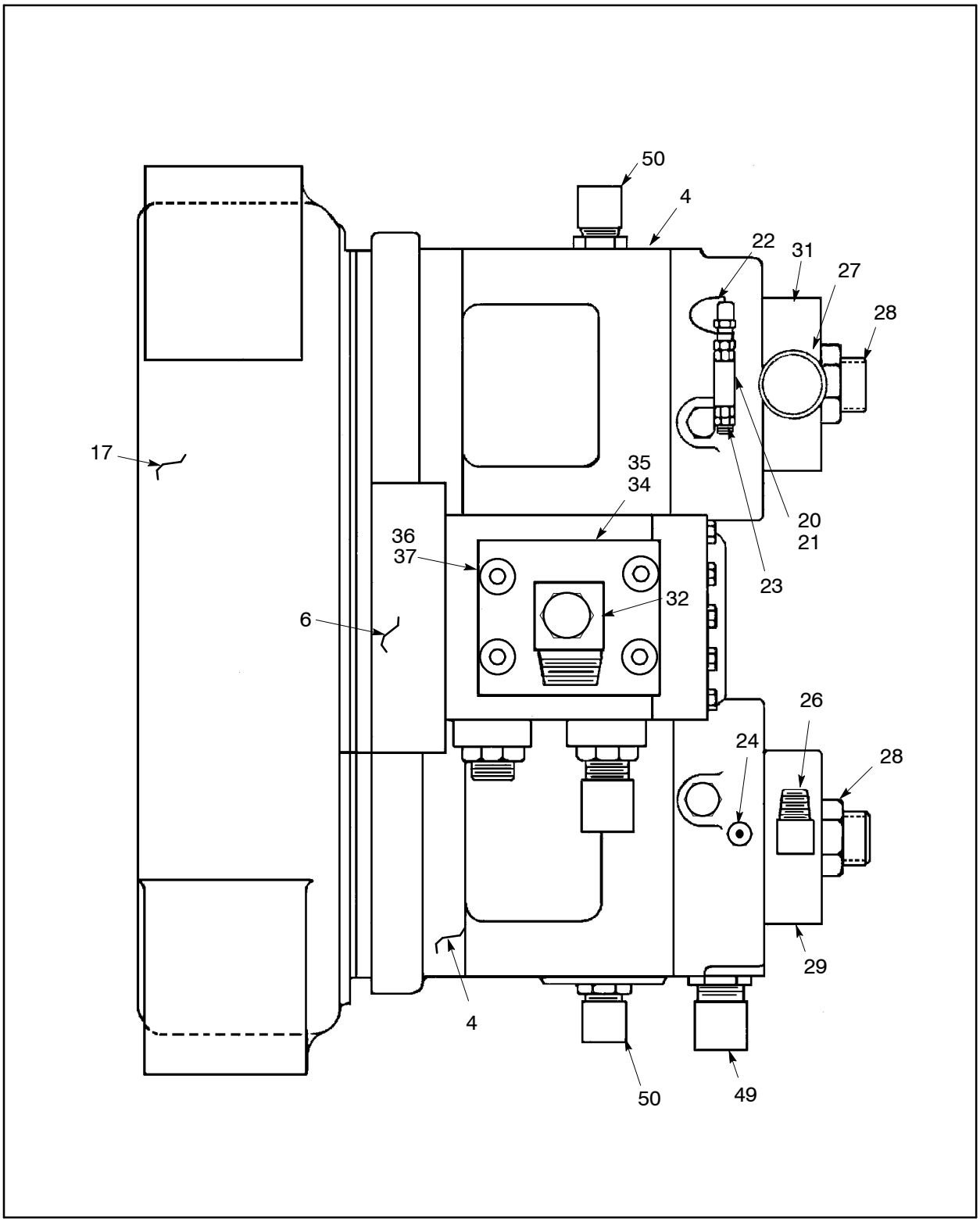

Figure 115 :DRIVE, MAIN HYDRAULIC – CLOSED LOOP
E57450496 REV04

57450496 DRIVE, MAIN HYDRAULIC – CLOSED LOOP

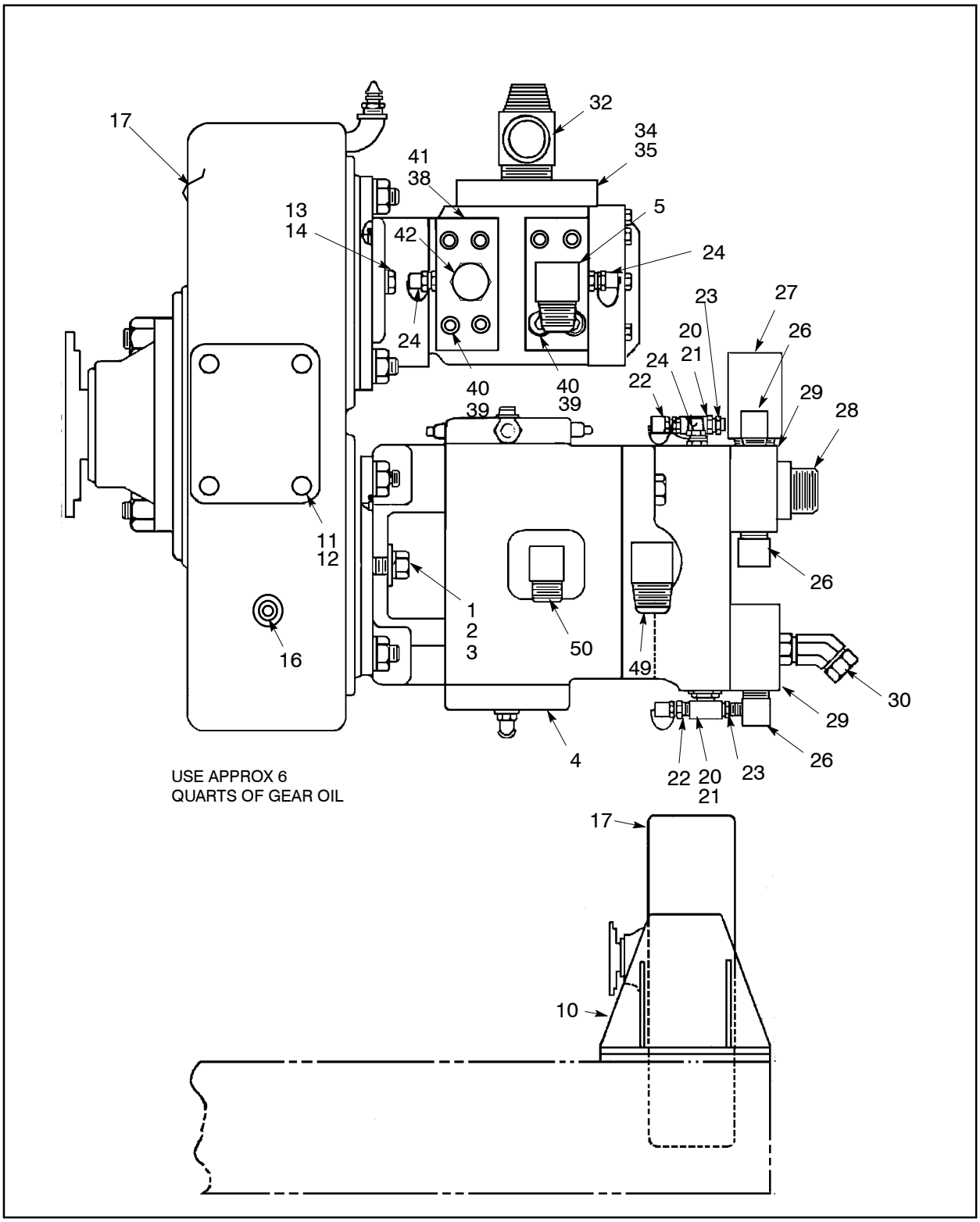

Figure 116 :DRIVE, MAIN HYDRAULIC – CLOSED LOOP
E57450496 REV04

WARNING: This manual contains data SPECIFIC to the drilling rig with serial number: 7341.

57450496 DRIVE, MAIN HYDRAULIC–CLOSED LOOP

REF.	PART NO.	QTY.	UNIT	DESCRIPTION
001	95335337	4	EA	SCREW, CAP–5/8–11 X 2
002	56951700	4	EA	TUBE
003	95081790	4	EA	WASHER, LOCK–5/8
004	57197402	2	EA	SUB 52247129, PUMP
	57197410	1	AS	● - ALTERATION INSTRUCTION *(See figure 117)*
005	95366001	1	EA	ADAPTER, 90DEG–O–RING/JIC
006	57220857	1	EA	PUMP, DOUBLE–HYDRAULIC *(See figure 119)*
007	95080206	4	EA	NUT, HEX LOCK–5/8–11
008	95380754	4	EA	SCREW,CAP–HEX 5/8–11X2.75
009	56986599	2	EA	WASHER
010	52227154	2	EA	BRACKET
011	95373585	8	EA	SCREW, CAP–5/8–11X1.75
012	95081790	8	EA	WASHER, LOCK–5/8
013	95081824	2	EA	WASHER, LOCK–1/2
014	95053047	2	EA	SCREW, CAP–HEX1/2–13X1.25
016	50057132	6.00	LB	OIL, GEAR
017	57352544	1	EA	DRIVE, PUMP–3 HOLE *(See figure 120)*
019	95329983	2	EA	FITTING, HYD–JIC/O–RING
020	95655064	3	EA	ADAPTER, INT NPT/O–RING
021	95279923	3	EA	TEE
022	59713438	3	EA	COUPLING, MIN $
023	95263380	2	EA	FITTING, HYD–NPT/JIC
024	57328676	3	EA	FITTING, TEST $
025	95316972	1	EA	FITTING, HYD–NPT/JIC
026	95480109	4	EA	FITTING, HYD–90DEG O–RING
027	57167728	1	EA	VALVE, CHECK–16 JIC
028	57167454	2	EA	FITTING,STR,20OFS X 20SAE
029	57213936	3	EA	BLOCK, FLANGE $
030	57167454	2	EA	FITTING,STR,20OFS X 20SAE
031	57409443	1	EA	FLANGE, STRAIGHT – SAE
032	57491441	1	EA	ADAPTER, TEE
034	50691989	1	EA	FLANGE
035	95086625	1	EA	O–RING
036	95055232	4	EA	SCREW, CAP–5/8–11 X 1–1/4
037	95209425	16	EA	WASHER, LOCK–5/8
038	57469546	2	EA	FLANGE BLOCK, 1” O’RING
039	95055299	8	EA	SCREW, CAP–3/8–16 X 3/4

57450496 DRIVE, MAIN HYDRAULIC – CLOSED LOOP

REF.	PART NO.	QTY.	UNIT	DESCRIPTION
040	95922639	8	EA	LOCKWASHER (HD)
041	95086518	2	EA	O – RING
042	95315289	1	EA	FITTING
044	95104501	4	EA	SCREW,CAP – HEX 5/8 – 11 X 4
045	95081790	4	EA	WASHER, LOCK – 5/8
046	95086567	4	EA	O – RING
047	95013702	12	EA	SCREW, SOCK – 5/8 – 11 X 2
049	95280194	2	EA	FITTING, HYD – 90 JIC/ORING
050	57167934	2	EA	FITTING, L90 – 120FS X12SAE

WARNING: This manual contains data SPECIFIC to the drilling rig with serial number: 7341.

57450496 DRIVE, MAIN HYDRAULIC – CLOSED LOOP

This page is blank.

57197410 ALTERATION INSTRUCTION

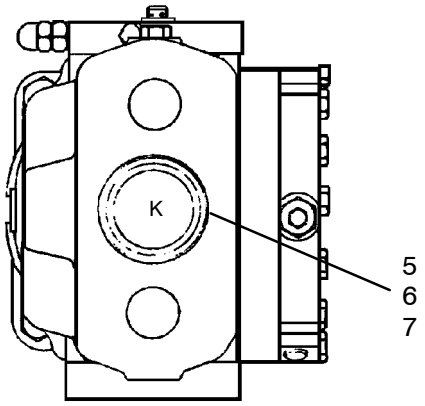

PROCEDURE "K" PORT ADAPTER

1. REMOVE SNAP RING, HOLDING PLUG IN PLACE. (BETWEEN "A" AND "B" PORTS ON END OF PUMP)
2. INSTALL O – RING 95086310 ONTO ADAPTER 56988728.
3. REMOVE PLUG AND INSTALL ADAPTER.
4. INSTALL SNAP RING AND PLUG "K" PORT WITH PLUG 95735346

*** – Notes**

PROCEDURE "A" PORT

1. REMOVE COVER PLUG #1 WHILE HOLDING LOCKNUT #2 FROM TURNING
2. MEASURE WITH MICROMETER THE DEMINSION FROM THE SURFACE OF THECONTROL SIDE PLATE TO THE TOP OF THE STOP SCREW #3. NOTE DOWN THIS READING AS "REF. READING" FOR ZERO IN / REV
3. LOOSEN LOCKNUT #2 AND BACK OUT STOP SCREW #3 UNTIL THE SCREW EXTENDS .2100" FURTHER FROM THE CONTROL SIDE PLATE THAN IN THE ABOVE STEP. CHECK WITH MICROMETER.
4. HOLD STOP SCREW #3 FROM TURNING AND TIGHTEN LOCKNUT #2.
5. HOLD LOCKNUT #2 FROM TURNING AND REPLACE THE COVER PLUG #1.

CAUTION: BE CERTAIN WHEN MEASURING THE SCREW EXTENSION THAT THE MEASURMENT IS MADE PARALLEL TO THE AXIS OF THE SCREW.

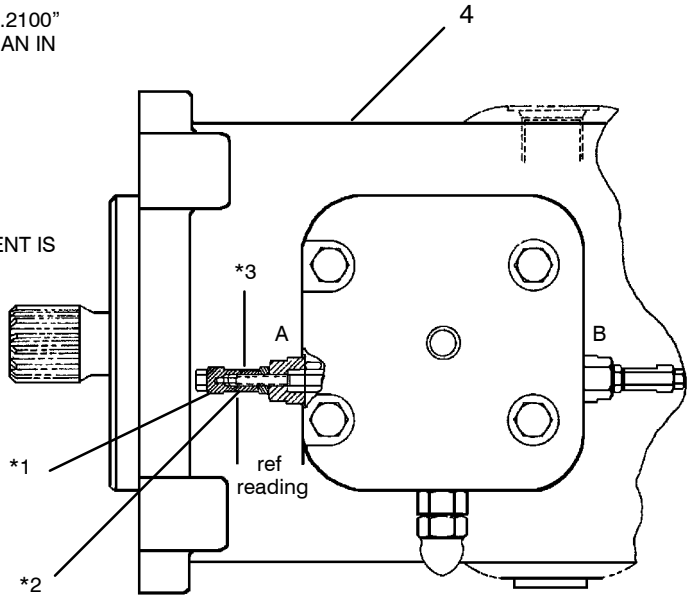

Figure 117 :ALTERATION INSTRUCTION
D57197410 REV02

WARNING: This manual contains data SPECIFIC to the drilling rig with serial number: 7341.

57197410 ALTERATION INSTRUCTION

REF.	PART NO.	QTY.	UNIT	DESCRIPTION	
004	52226834	1	EA	PUMP, HYDRAULIC–MAIN	
	57480386	1	EA	● - SERVO, PUMP–INPUT	*(See figure 118)*
005	56988728	1	EA	COVER,FTG/90514L	
006	95086310	1	EA	O–RING	
007	95735346	1	EA	FITTING, HYD	

57480386 SERVO, PUMP – INPUT, MANUAL

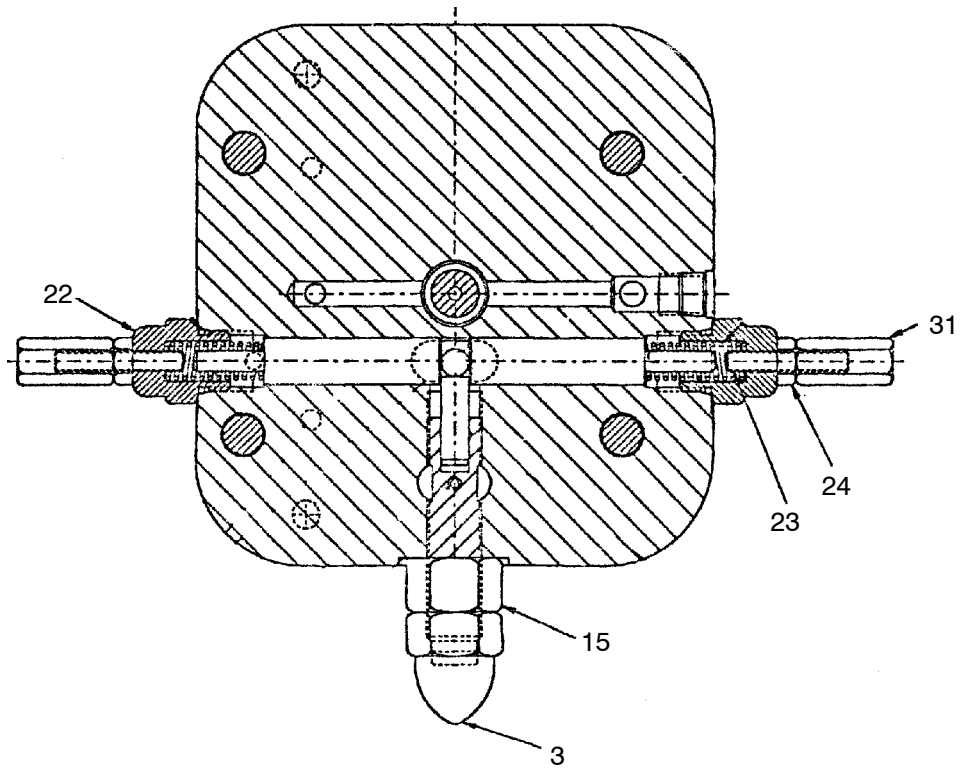

Figure 118 :SERVO, PUMP – INPUT, MANUAL
D57480386 REV 00

WARNING: This manual contains data SPECIFIC to the drilling rig with serial number: 7341.

57480386 SERVO, PUMP – INPUT, MANUAL

REF.	PART NO.	QTY.	UNIT	DESCRIPTION
003	57239725	1	EA	NUT,ACORN
015	57104929	1	EA	NUT, JAM
022	57480402	2	EA	B – PLUG, 6 CIPR
023	57239717	2	EA	SCREW, SET
024	57104937	2	EA	NUT, JAM
031	57104895	2	EA	COVER, NUT

57220857 PUMP, DOUBLE – HYDRAULIC

Purchase Specification Only

Figure 119 :PUMP, DOUBLE – HYDRAULIC
A57220857 REV01

57220857 PUMP, DOUBLE – HYDRAULIC

REF.	PART NO.	QTY.	UNIT	DESCRIPTION
001	57032997	1	EA	KIT,SEAL
002	57053522	1	EA	CAM ASSEMBLY (14)
003	57033029	1	EA	CAM ASSEMBLY (25)
003	57150278	1	EA	CAM ASSEMBLY
004	57053555	1	EA	SHAFT

57352544 DRIVE, PUMP−3 HOLE

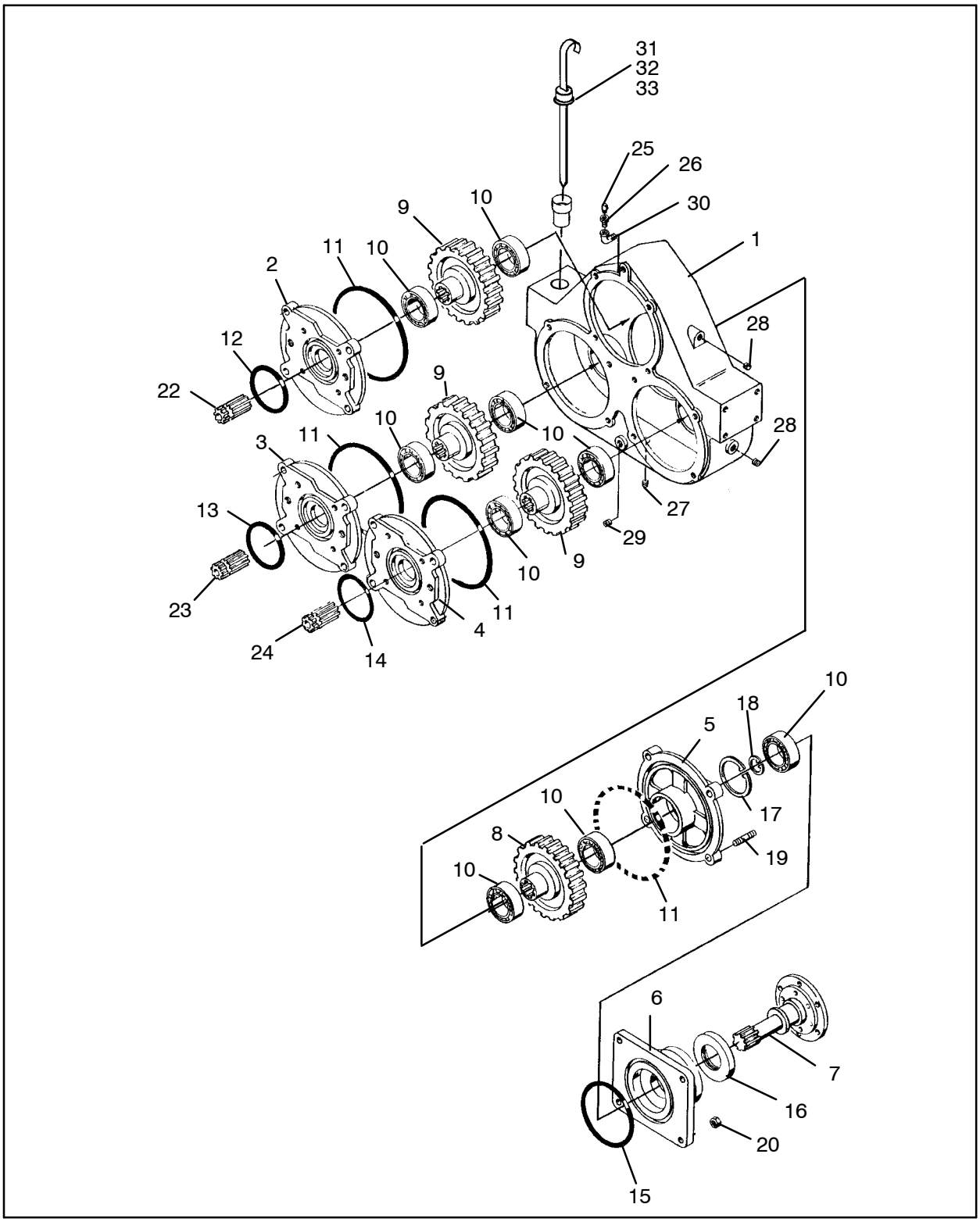

Figure 120 :DRIVE, PUMP−3 HOLE
E57352528 REV 00

WARNING: This manual contains data SPECIFIC to the drilling rig with serial number: 7341.

57352544 DRIVE, PUMP–3 HOLE

REF.	PART NO.	QTY.	UNIT	DESCRIPTION
001	59551127	1	EA	HOUSING, GEARBOX
002	59572917	1	EA	ADAPTER, SAE B
003	50597624	1	EA	ADAPTER, SAE C
004	50597624	1	EA	ADAPTER, SAE C
005	50597632	1	EA	ADAPTER, PUMP D
006	50597640	1	EA	ADAPTER, INPUT
007	50595115	1	EA	SHAFT, INPUT
008	50597657	1	EA	PINION
009	50597665	3	EA	GEAR
010	95200663	9	EA	BEARING
011	50717735	4	EA	O–RING
012	50597434	1	EA	O–RING
013	95045324	1	EA	O–RING
014	95045324	1	EA	O–RING
015	50717743	1	EA	O–RING
016	50717750	1	EA	SEAL, OIL
017	50597442	1	EA	RING,SNAP
018	95223475	1	EA	RING, RETAINING
019	50594761	4	EA	STUD
020	50943240	16	EA	NUT
022	52143195	1	EA	SLEEVE, ADAPTER
023	59516096	1	EA	SLEEVE, SPLINE
024	59516096	1	EA	SLEEVE, SPLINE
025	50597483	1	EA	BREATHER
026	59551242	1	EA	BUSHING, REDUCER
027	59514976	1	EA	PLUG, MAGNETIC
028	59551259	4	EA	PLUG, OIL LEVEL
029	59551267	1	EA	PLUG
030	59551275	1	EA	ELBOW
030	59551259	4	EA	PLUG, OIL LEVEL
031	59551226	12	EA	BOLT USE 50594761
032	50906379	1	EA	TUBE
033	59515007	1	EA	DIPSTICK

57450777 PIPING, PROPEL−CLSDLOOP *

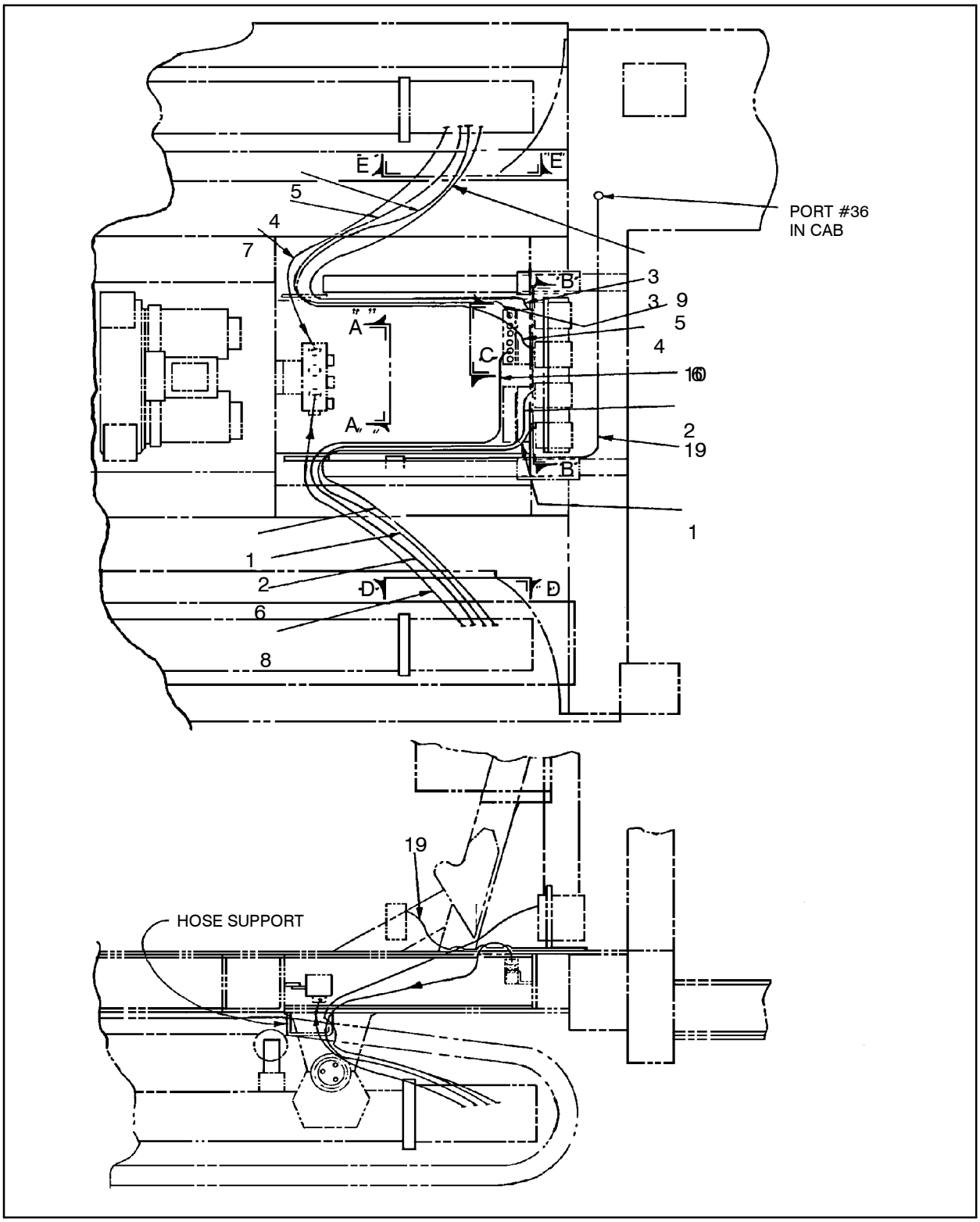

Figure 121 :PIPING, PROPEL−CLSDLOOP *
E57450777 REV 04

WARNING: This manual contains data SPECIFIC to the drilling rig with serial number: 7341.

57450777 PIPING, PROPEL–CLSDLOOP *

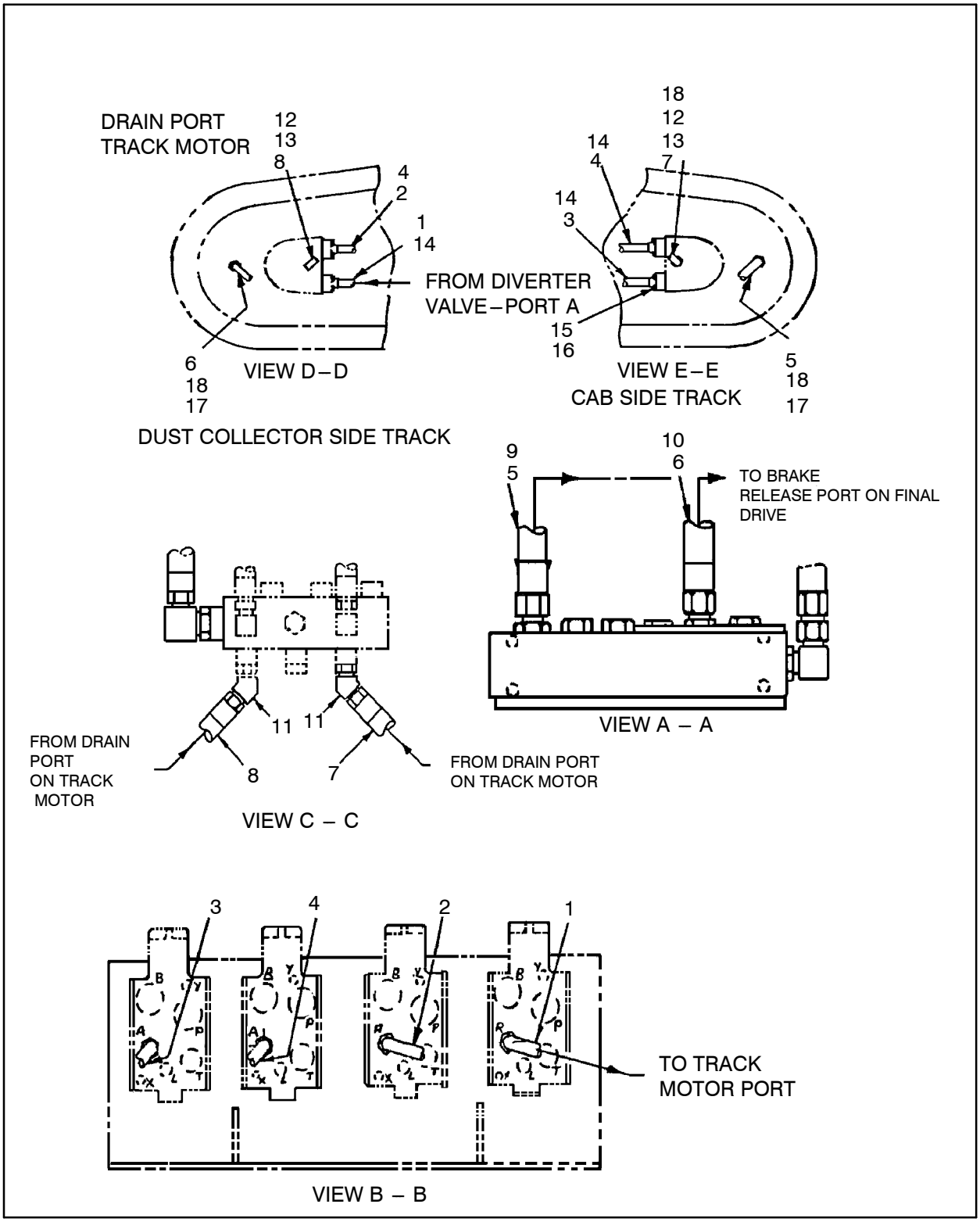

Figure 122 :PIPING, PROPEL–CLSDLOOP *
E57450777 REV 04

57450777 PIPING, PROPEL–CLSDLOOP *

PIPING, PROPEL–CLSDLOOP TP: 57450777

REF.	PART NO.	QTY.	UNIT	DESCRIPTION
001	57430977	1	AS	HOSE ASSY
002	57430977	1	AS	HOSE ASSY
003	57430977	1	AS	HOSE ASSY
004	57430977	1	AS	HOSE ASSY
005	57239477	1	EA	HOSE ASSY
006	57239477	1	EA	HOSE ASSY
007	56954274	1	EA	HOSE ASSY
008	56954274	1	EA	HOSE ASSY
009	95329975	2	EA	FITTING, HYD
010	95356853	2	EA	FITTING, HYD
011	56953078	2	EA	FITTING, HYD
012	57391559	2	EA	CONNECTOR, MALE
013	57072423	2	EA	ADAPTER
014	52226115	4	EA	KIT, SPLIT FLANGE
015	50922202	16	EA	SCREW–HEX M12X1.75X40MM
016	95081824	16	EA	WASHER, LOCK–1/2
017	57405151	0	EA	BUSHING, METRIC TO JIC
018	95402806	2	EA	FITTING
019	56953896	1	EA	HOSE ASSY

WARNING: This manual contains data SPECIFIC to the drilling rig with serial number: 7341.

57450777 PIPING, PROPEL–CLSDLOOP *

This page is blank.

Figure 123 :PIPING, PROPEL–CLSDLOOP *
E57450777 REV 04

57482564 PIPING, HYDRAULIC TANK

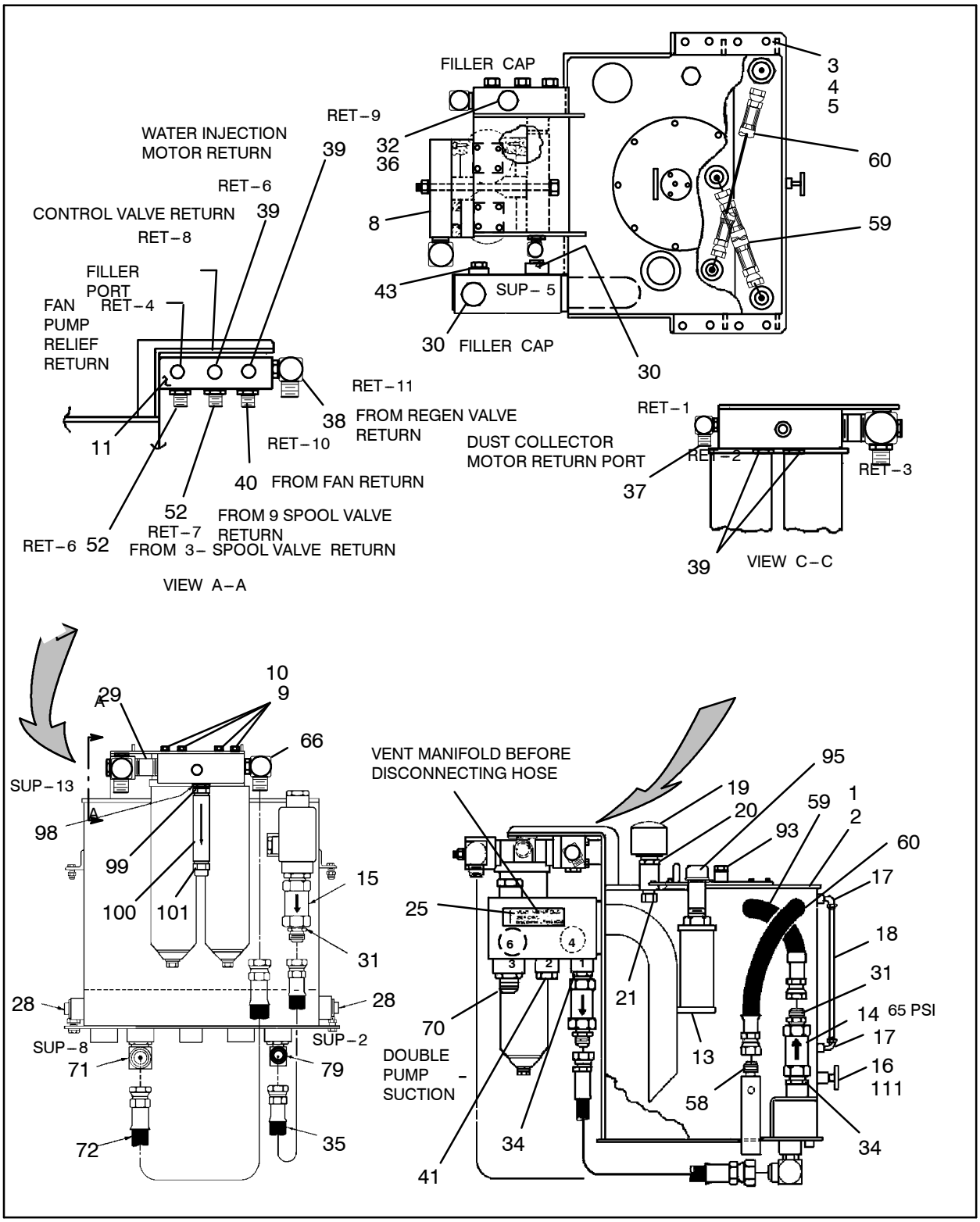

Figure 124 :PIPING, HYDRAULIC TANK
E57482564 REV02

WARNING: This manual contains data SPECIFIC to the drilling rig with serial number: 7341.

57482564 PIPING, HYDRAULIC TANK

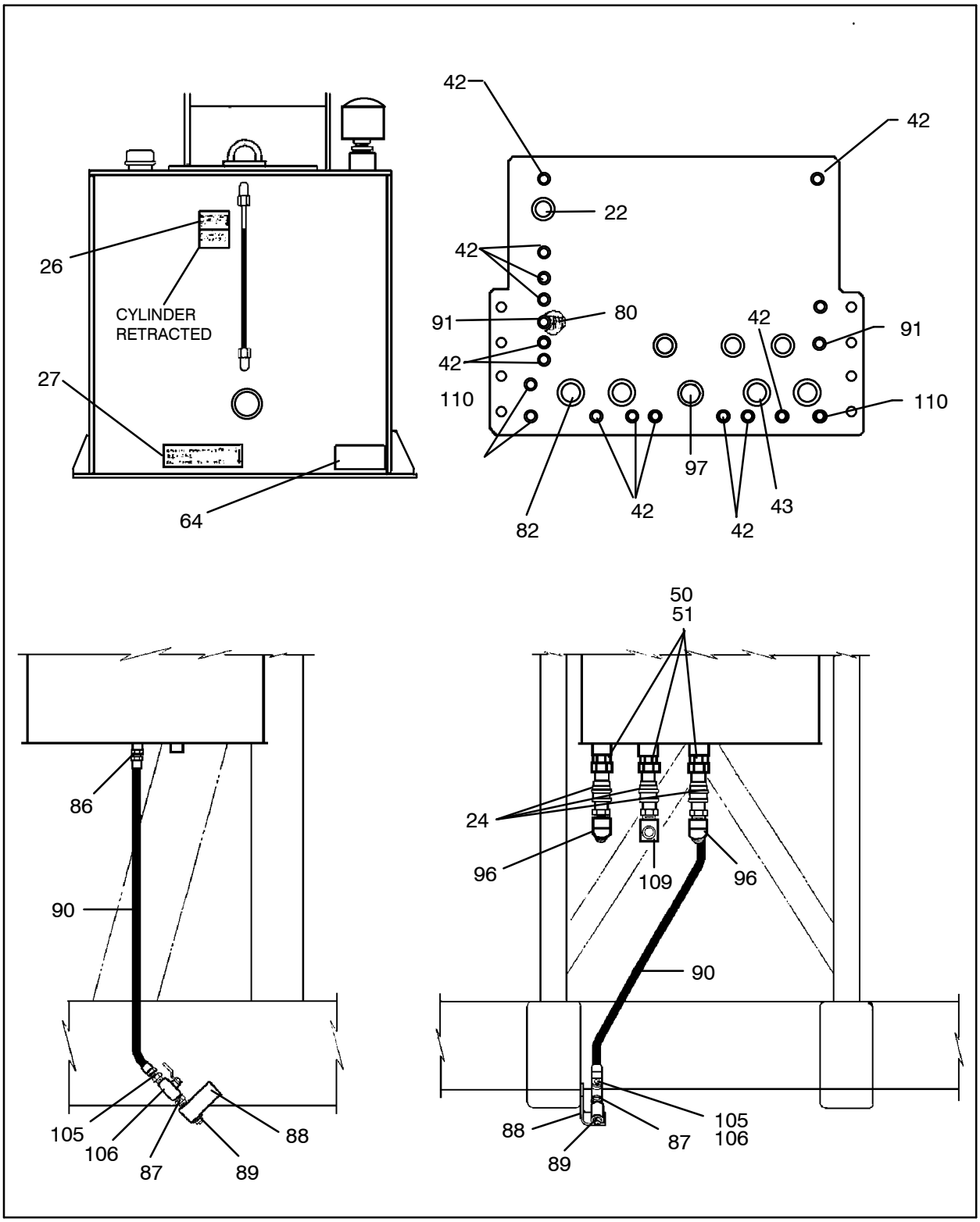

Figure 125 :PIPING, HYDRAULIC TANK
E57482564 REV02

57482564 PIPING, HYDRAULIC TANK

REF.	PART NO.	QTY.	UNIT	DESCRIPTION	
001	57481061	1	EA	TANK, HYDRAULIC	
002	52223781	150.00	GL	OIL, HYDRAULIC	
003	95104188	12	EA	SCREW, CAP–1/2–13 X 1–3/4	
004	95081824	12	EA	WASHER, LOCK–1/2	
005	95077798	12	EA	NUT, HEX–1/2–13	
008	52254885	1	EA	FILTER, HYDRAULIC	*(See figure 126)*
009	95920682	8	EA	SCREW, CAP–3/8–16 X 1–1/4	
010	95653317	1	EA	FITTING, HYD	
010	95937413	8	EA	WASHER, LOCK–3/8 PLATED	
011	57482556	1	EA	MANIFOLD, RETURN	
013	50247691	1	EA	STRAINER, OIL	
014	50261825	2	EA	VALVE, CHECK	
015	50247733	1	EA	VALVE, CHECK	
016	50463454	1	EA	THERMOMETER	
017	50364199	2	EA	FITTING, TUBE	
018	50247709	16.00	IN	TUBING, VINYL	
019	50903236	1	EA	BREATHER	
020	95038105	1	EA	BUSHING, PIPE–REDUCING	
021	50811173	1	EA	VENT	
022	50691765	1	EA	PLUG	
024	57167132	3	EA	DISCONNECT	
025	50829704	1	EA	DECAL, VENT MANIFOLD	
026	50810993	1	EA	DECAL, HYD.OIL LEVEL	
027	50829712	1	EA	DECAL, DRAIN MANIFOLD	
028	95404323	2	EA	PLUG, PIPE–2” SQ C’SUNK	
029	50691831	1	EA	NIPPLE	
030	95663803	2	EA	FITTING, TUBE	
031	95219770	3	EA	FITTING, HYD	
032	57093775	1	EA	PLUG, MINI	
034	50691690	3	EA	ADAPTER	
035	57449415	1	EA	HOSE ASSY	
036	57094526	1	EA	PLUG, VENT	
	95735346	1	EA	● - FITTING, HYD	
037	95280186	1	EA	FITTING, HYD	
038	57233983	1	EA	FITTING,L90,16OFS X 20SAE	
039	95664934	5	EA	PLUG, 1–1/16–12	
040	95356986	1	EA	FITTING	

WARNING: This manual contains data SPECIFIC to the drilling rig with serial number: 7341.

57482564 PIPING, HYDRAULIC TANK

REF.	PART NO.	QTY.	UNIT	DESCRIPTION
041	95361028	1	EA	PLUG–W/O–RNG
042	95343596	13	EA	PLUG, WITH O–RING
043	95735346	2	EA	FITTING, HYD
050	95219762	3	EA	FITTING, HYD
051	95266433	3	EA	O–RING
052	52167160	2	EA	FITTING, HYD
058	95315289	1	EA	FITTING
059	56973027	1	EA	HOSE ASSY
060	56956675	1	EA	HOSE ASSY
064	52223807	1	EA	DECAL, HYDRAULIC OIL
066	95431292	1	EA	FITTING, HYD
070	95371241	1	EA	ADAPTER, STR.–JIC/O–RING
071	95371209	1	EA	ADAPTER–90DEG,ORING/JIC
072	57044661	1	EA	HOSE ASSY
079	95357604	1	EA	ADAPTER–90DEG,ORING/JIC
080	95303335	1	EA	FITTING, HYD
082	95376133	1	EA	ADAPTER–90DEG,ORING/JIC
086	95356960	1	EA	FITTING, HYD
087	95219747	1	EA	FITTING, HYD
088	52235363	1	EA	BRACKET, OIL
089	95002143	1	EA	PLUG, PIPE–SQ HEAD, 3/4
090	57183832	1	EA	HOSE ASSEMBLY
091	95653317	2	EA	FITTING, HYD
093	57352825	1	EA	VALVE, RELIEF
095	95038410	1	EA	CAP, PIPE–1–1/2
096	95279121	2	EA	FITTING
097	57167728	1	EA	VALVE, CHECK–16 JIC
098	95038154	1	EA	BUSHING PIPE
099	95324273	1	EA	FITTING,HYD
100	50261825	1	EA	VALVE, CHECK
101	95219770	1	EA	FITTING, HYD
105	95279378	1	EA	FITTING, HYD
106	50829605	1	EA	VALVE, BALL
109	95219853	1	EA	FITTING, HYD
110	95371258	3	EA	FITTING, HYD
111	95037412	1	EA	BUSHING

52254885 FILTER, HYDRAULIC

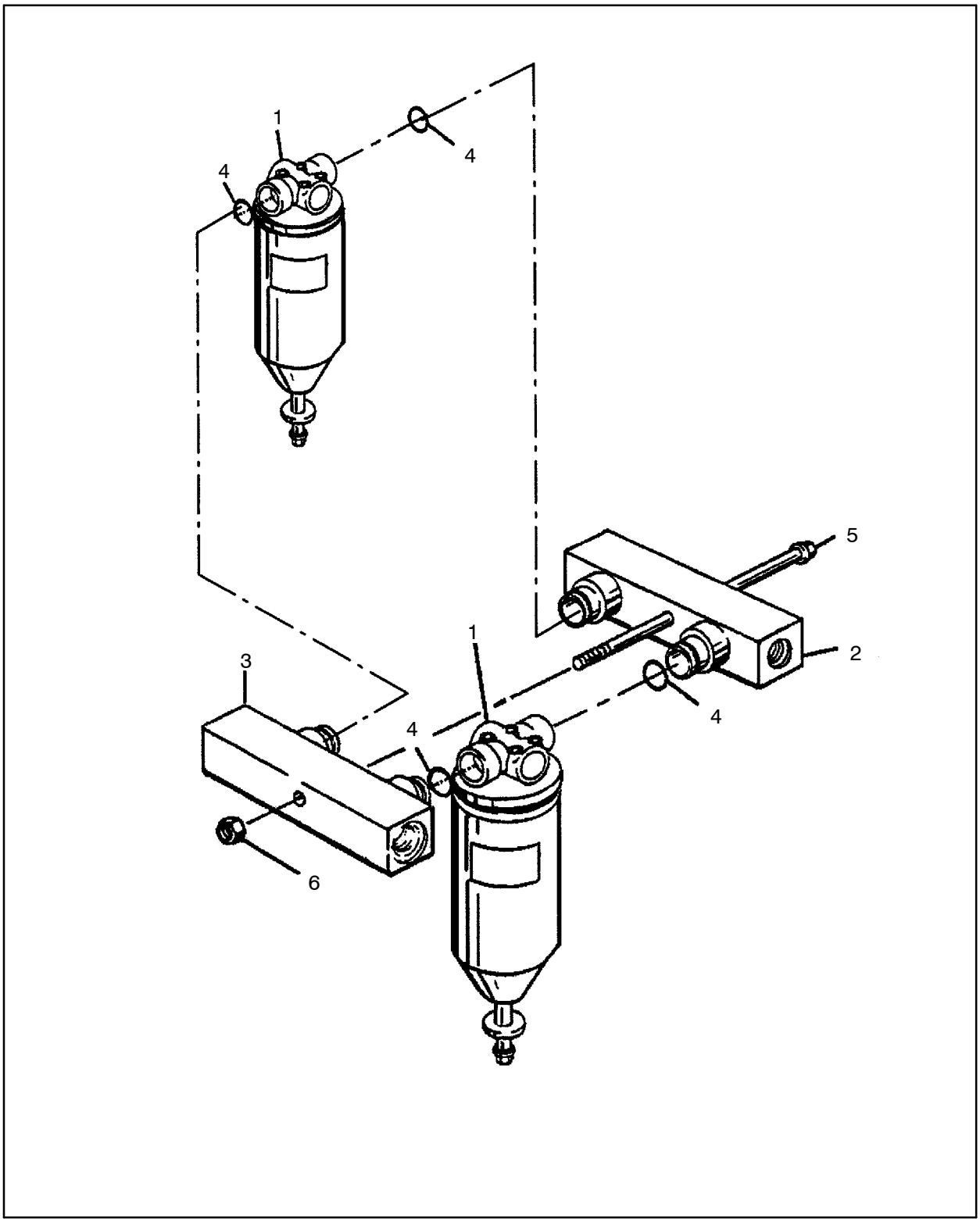

Figure 126 :FILTER, HYDRAULIC
D52254885 REV 03

52254885 FILTER, HYDRAULIC

REF.	PART NO.	QTY.	UNIT	DESCRIPTION	
001	52259363	2	EA	FILTER ASSY–HYD	*(See figure 127)*
002	52263530	2	EA	MANIFOLD	
003	52263548	1	EA	MANIFOLD	
004	52263555	1	EA	O–RING	
005	52263563	1	EA	BOLT	
006	52263571	1	EA	NUT,LOCK	

52259363 FILTER ASSEMBLY – HYDRAULIC

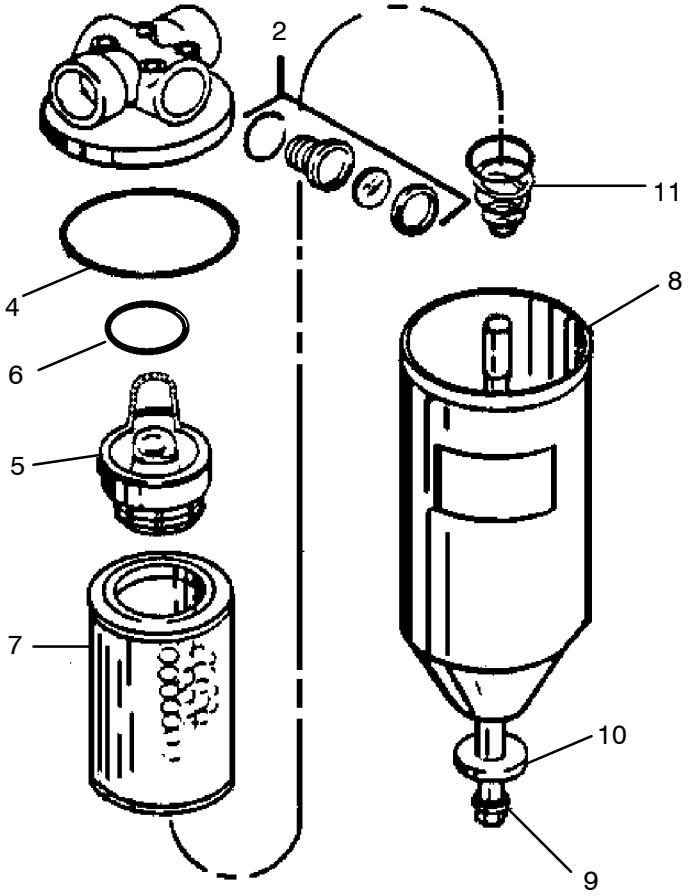

Figure 127 :FILTER ASSEMBLY – HYDRAULIC
W52259363 REV02

52259363 FILTER ASSEMBLY–HYDRAULIC

REF.	PART NO.	QTY.	UNIT	DESCRIPTION
002	35277151	1	EA	GLASS
004	95070603	1	EA	O–RING
005	57113367	1	EA	VALVE,BY PASS
006	35251511	1	EA	O–RING
007	52263183	1	EA	ELEMENT,FLTR–MAIN HYD
008	35251529	1	EA	HOUSING
009	50815638	1	EA	BOLT
010	35251545	1	EA	WASHER, GSKT
011	35251552	1	EA	SPRING

57204729 VALVE, 3 SPOOL – INSTALL

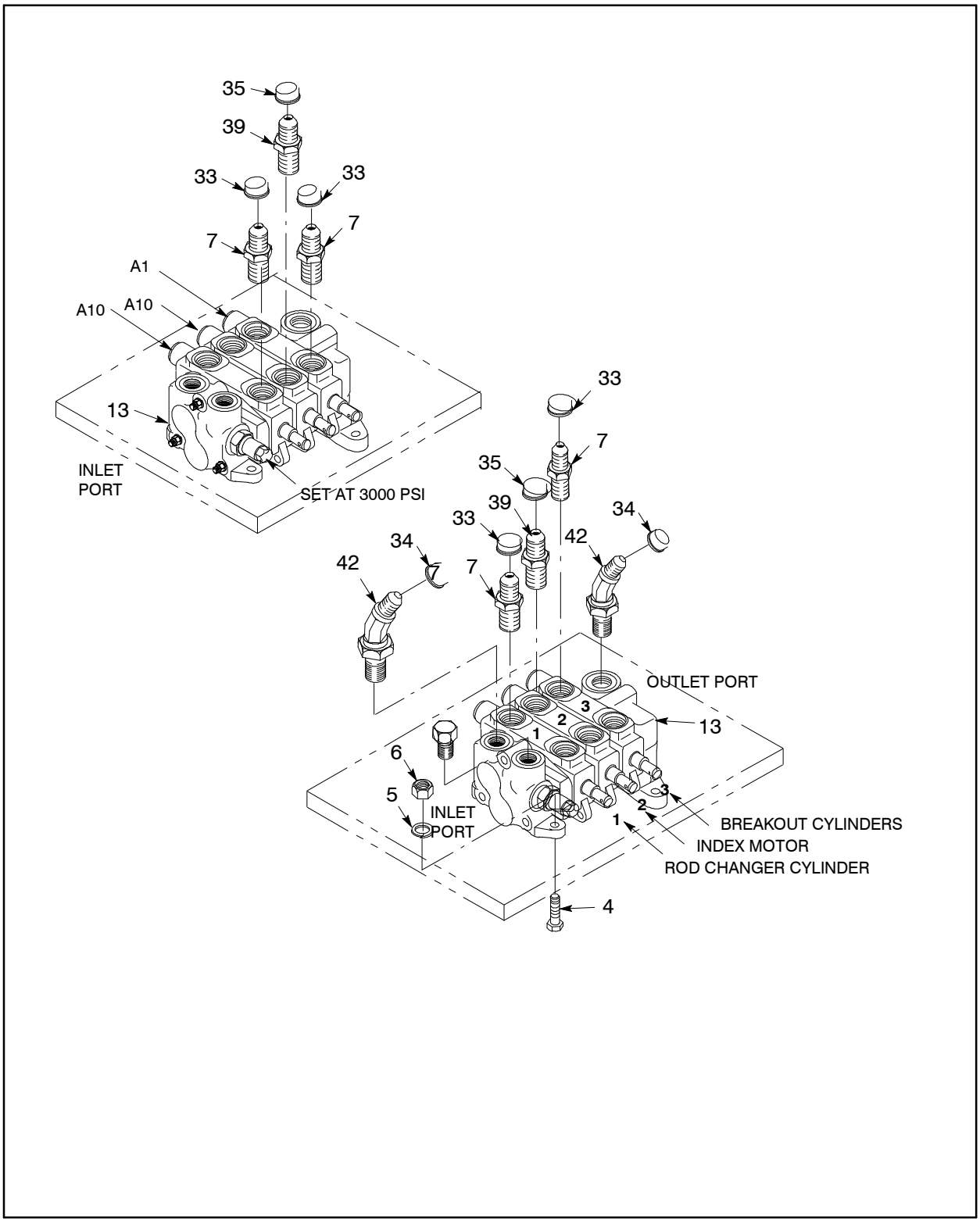

Figure 128 :VALVE, 3 SPOOL – INSTALL
E57204729 REV 03

WARNING: This manual contains data SPECIFIC to the drilling rig with serial number: 7341.

57204729 VALVE, 3 SPOOL–INSTALL

REF.	PART NO.	QTY.	UNIT	DESCRIPTION	
004	95934584	4	EA	SCREW,CAP–3/8–16 X 1–1/2	
005	95937413	4	EA	LOCKWASHER–3/8 PLATED	
006	95922894	4	EA	NUT, HEX–3/8–16	
007	95356903	4	EA	FITTING HYD	
013	57204711	1	EA	VALVE, 3 SPOOL	*(See figure 129)*
033	50696731	4	EA	CAP,PLASTIC–9/16–18 THDS	
034	50696756	2	EA	CAP,PLASTIC–1–1/16–12 THD	
035	50696012	2	EA	CAP,PLASTIC–3/4–16 THDS	
039	95303368	2	EA	ADAPTER,STR JIC/O–RING	
042	95433264	2	EA	ELBOW	
043	95922373	4	EA	WASHER,FLAT–3/8	

57204711 VALVE, 3 SPOOL

3−SPOOL VALVE

TP: 57204729

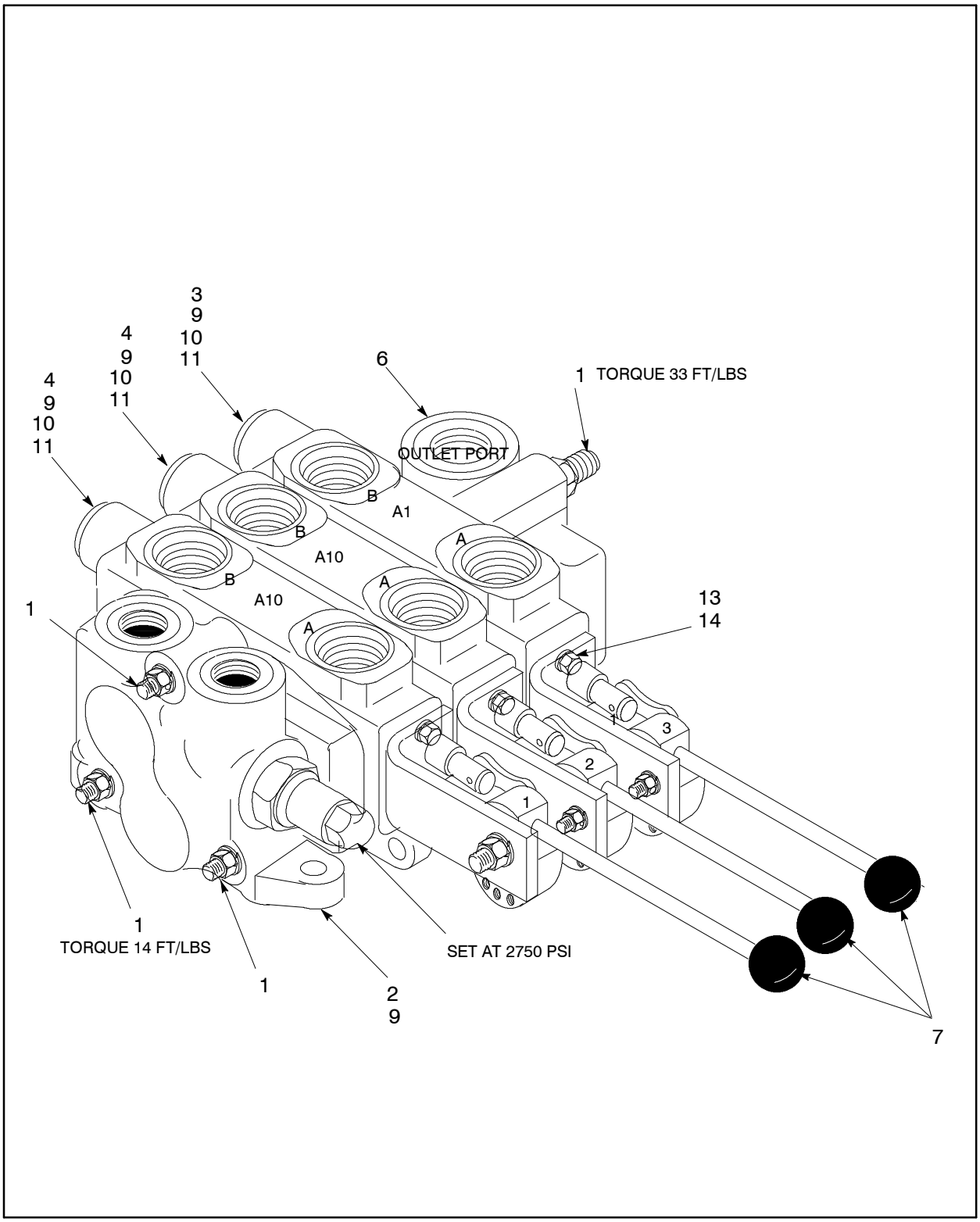

Figure 129 :VALVE, 3 SPOOL
D57204711 REV02

WARNING: This manual contains data SPECIFIC to the drilling rig with serial number: 7341.

57204711 VALVE, 3 SPOOL

REF.	PART NO.	QTY.	UNIT	DESCRIPTION	
001	50613736	1	EA	ROD ASSY	
002	50617091	1	EA	SECTION, VALVE INLET	*(See figure 130)*
003	50613199	1	EA	SECTION, VALVE SPOOL	*(See figure 132)*
004	50613207	2	EA	SECTION, VALVE SPOOL	*(See figure 133)*
006	50953496	1	EA	SECTION,OUTLET	
007	50613728	3	EA	HANDLE ASSY	*(See figure 134)*
009	50619014	4	EA	O RING	
010	50618990	3	EA	POPPET	
011	50619006	3	EA	SPRING	
013	95067591	6	EA	SCREW CAP	
014	95934766	6	EA	LOCKWASHER–1/4 PLATED	

50617091 SECTION, VALVE INLET

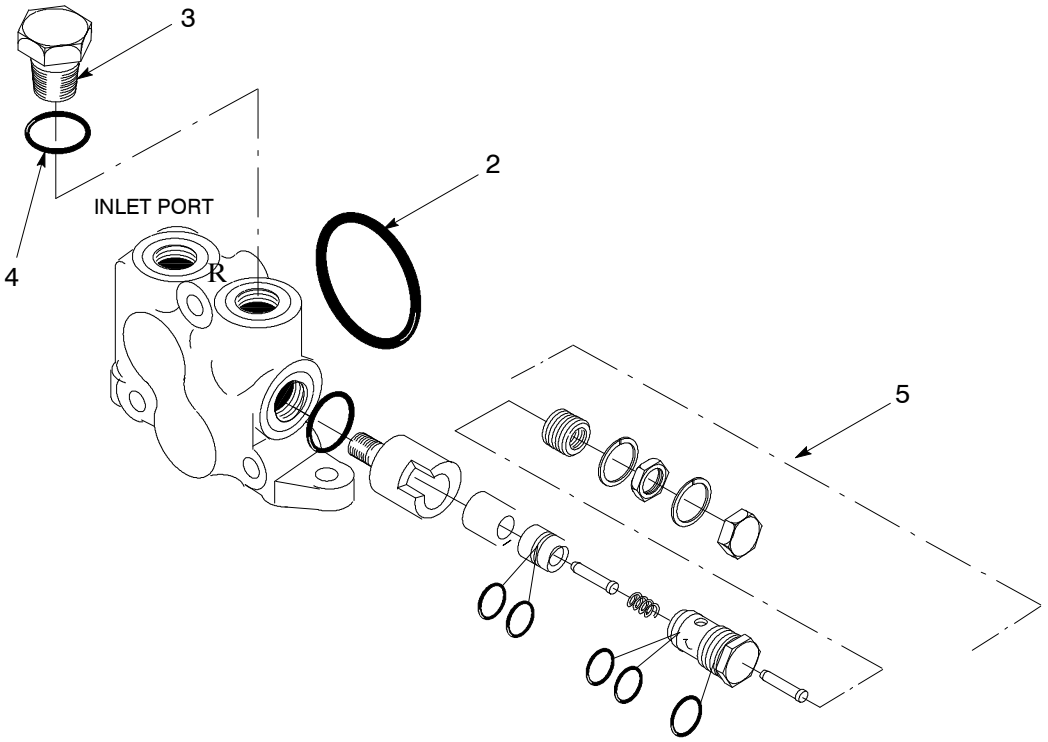

Figure 130 :SECTION, VALVE INLET
Y50613165 REV 00

50617091 SECTION, VALVE INLET

REF.	PART NO.	QTY.	UNIT	DESCRIPTION	
002	50619014	1	EA	O RING	
003	50634328	1	EA	PLUG	
004	50605682	1	EA	O-RING	
005	50634336	1	EA	RELIEF	*(See figure 131)*

50634336 RELIEF

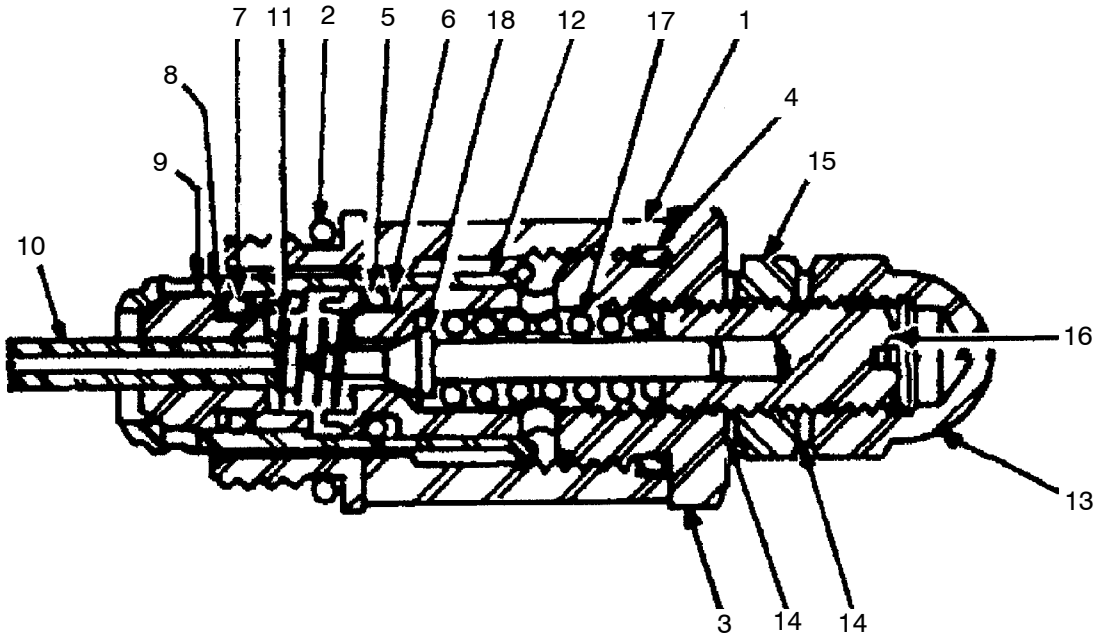

Figure 131 :RELIEF
00000000 REV 00

WARNING: This manual contains data SPECIFIC to the drilling rig with serial number: 7341.

50634336 RELIEF

REF.	PART NO.	QTY.	UNIT	DESCRIPTION
001	50634344	1	EA	CAP
002	50605682	1	EA	O-RING
003	50634351	1	EA	PILOT SECTON
004	50605732	1	EA	O-RING
005	50605690	1	EA	O-RING
006	50605724	1	EA	RING,BACK-UP
007	50605708	1	EA	O-RING
008	50605716	1	EA	RING,BACK-UP
009	50634369	1	EA	POPPET
010	50634377	1	EA	PISTON
011	50634385	1	EA	SPRING
012	50634393	1	EA	POPPET
013	50635945	1	EA	NUT
014	50635952	2	EA	WASHER
015	50635960	1	EA	NUT
016	50635978	1	EA	SCREW
017	50635986	1	EA	SPRING
018	50635994	1	EA	POPPET

50613199 SECTION, VALVE SPOOL

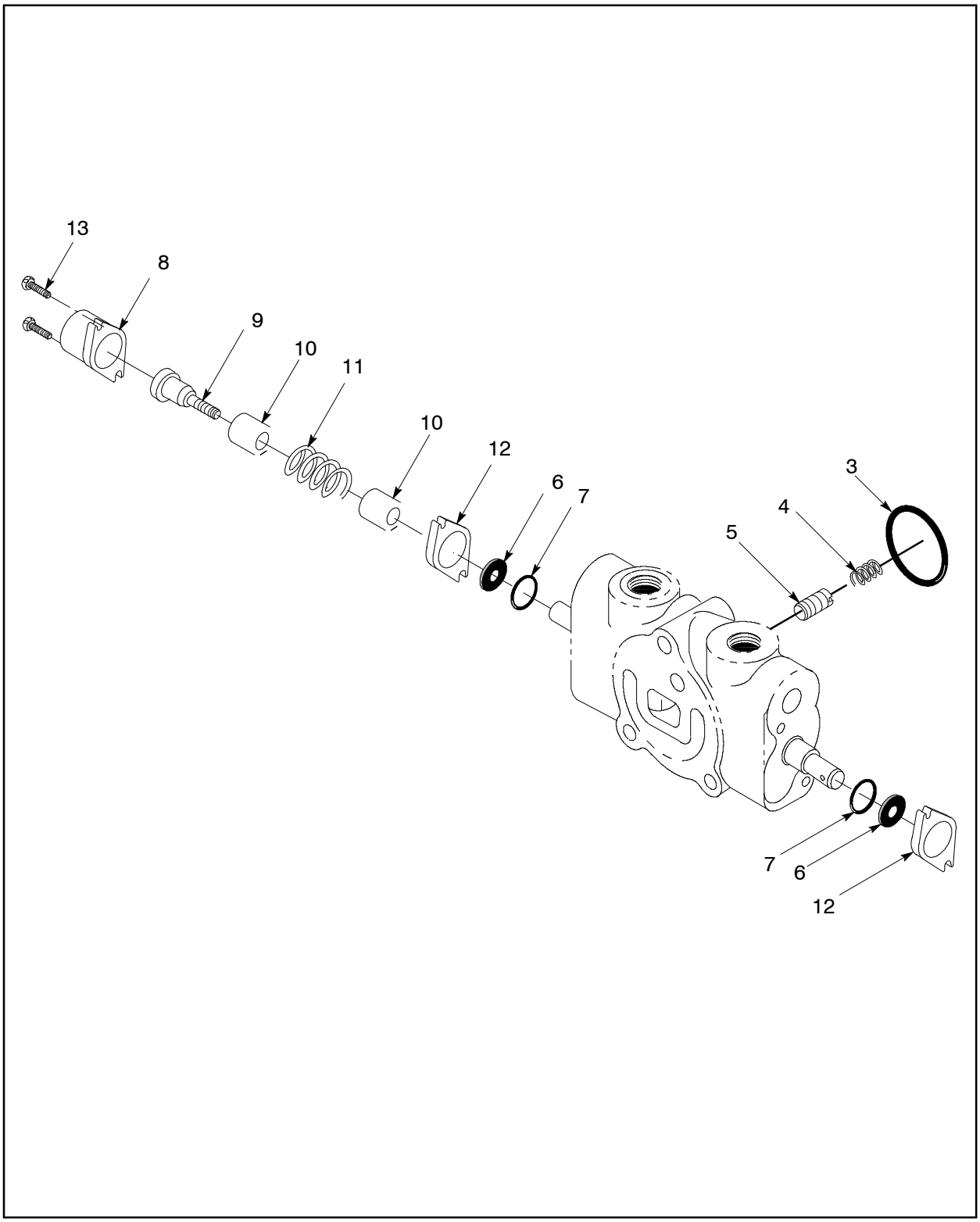

Figure 132 :SECTION, VALVE SPOOL
Y347387 REV 00

WARNING: This manual contains data SPECIFIC to the drilling rig with serial number: 7341.

50613199 SECTION, VALVE SPOOL

REF.	PART NO.	QTY.	UNIT	DESCRIPTION
003	50619014	1	EA	O RING
004	50619006	1	EA	SPRING
005	50618990	1	EA	POPPET
006	50605740	2	EA	SEAL
007	50605757	2	EA	O–RING
008	50636018	1	EA	CAP
009	50636026	1	EA	SCREW, ADJUSTING
010	50636034	2	EA	SEAT
011	50636042	1	EA	SPRING
012	50636059	1	EA	PLATE
013	50636000	2	EA	SCREW

50613207 SECTION, VALVE SPOOL

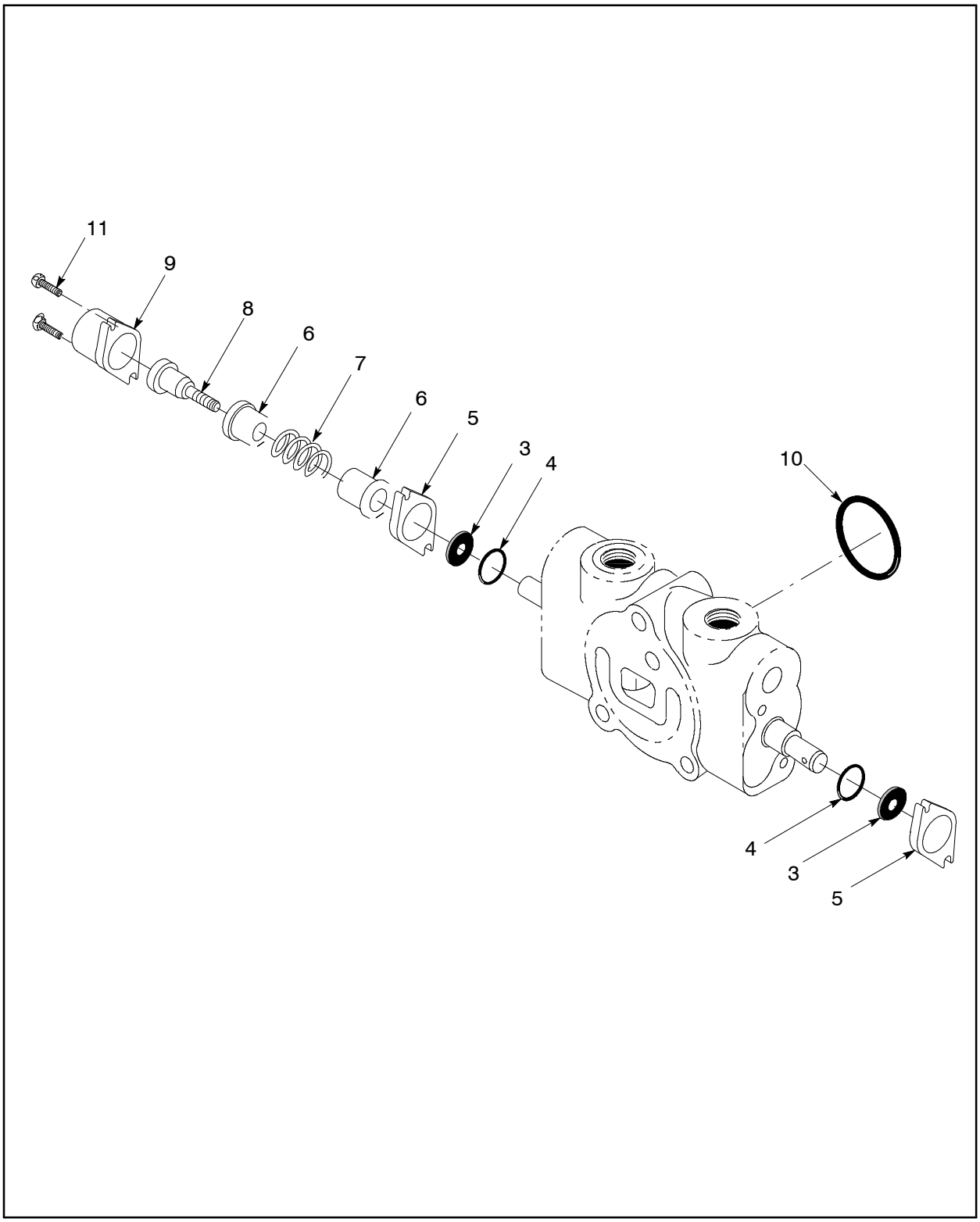

Figure 133 :SECTION, VALVE SPOOL
Y347390 REV 00

WARNING: This manual contains data SPECIFIC to the drilling rig with serial number: 7341.

50613207 SECTION, VALVE SPOOL

REF.	PART NO.	QTY.	UNIT	DESCRIPTION
003	50605740	2	EA	SEAL
004	50605757	2	EA	O-RING
005	50636059	1	EA	PLATE
006	50636034	2	EA	SEAT
007	50636042	1	EA	SPRING
008	50636026	1	EA	SCREW, ADJUSTING
009	50636018	1	EA	CAP
010	50619014	1	EA	O RING
011	50636000	2	EA	SCREW

50613728 HANDLE ASSY

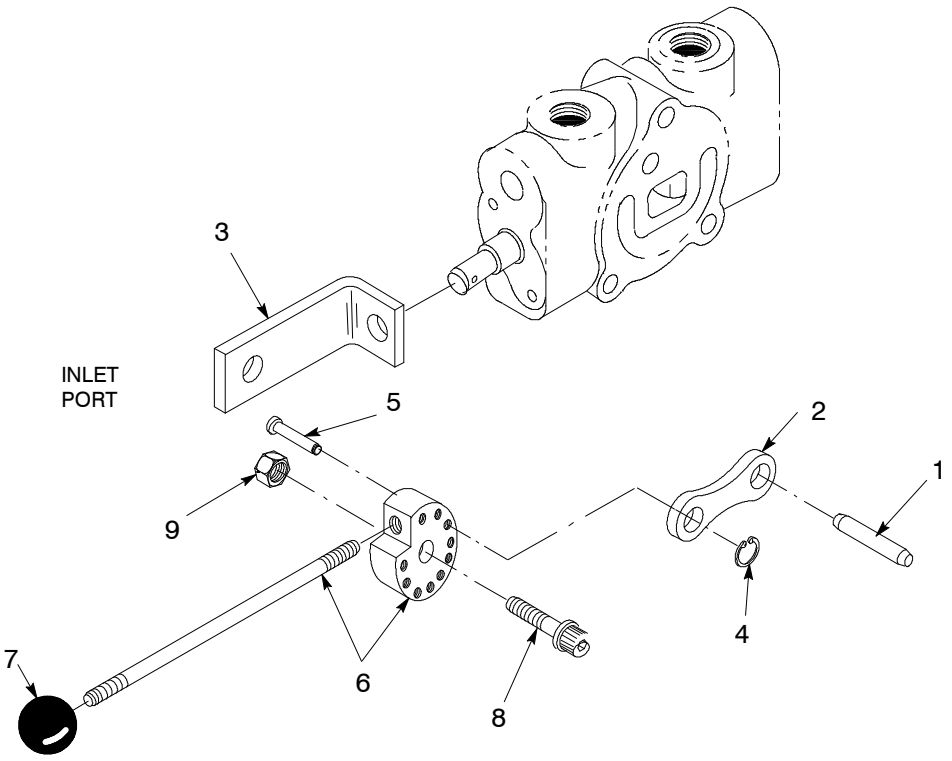

Figure 134 :HANDLE ASSY
Y347391 REV 01

WARNING: This manual contains data SPECIFIC to the drilling rig with serial number: 7341.

50613728 HANDLE ASSY

REF.	PART NO.	QTY.	UNIT	DESCRIPTION
001	50668078	1	EA	ROLL PIN
002	50668060	1	EA	LINK
003	58176207	1	EA	LEVER BRKT
004	95780060	1	EA	RETAIN RING
005	50830322	1	EA	PIN
006	50830348	1	EA	LEVER
007	50830355	1	EA	KNOB,BLACK
008	50830363	1	EA	SCREW
009	95929782	1	EA	NUT, HEX–5/16–18

57448144 VALVE, REGEN – HP

REGEN VALVE

TP: 57448144

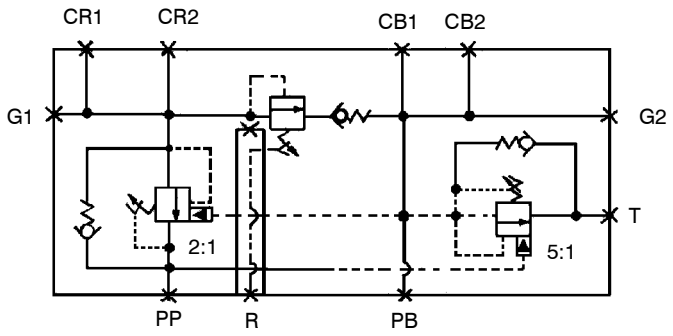

SCHEMATIC

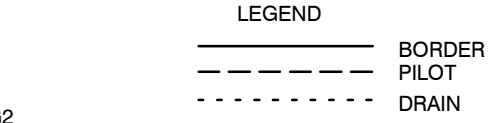

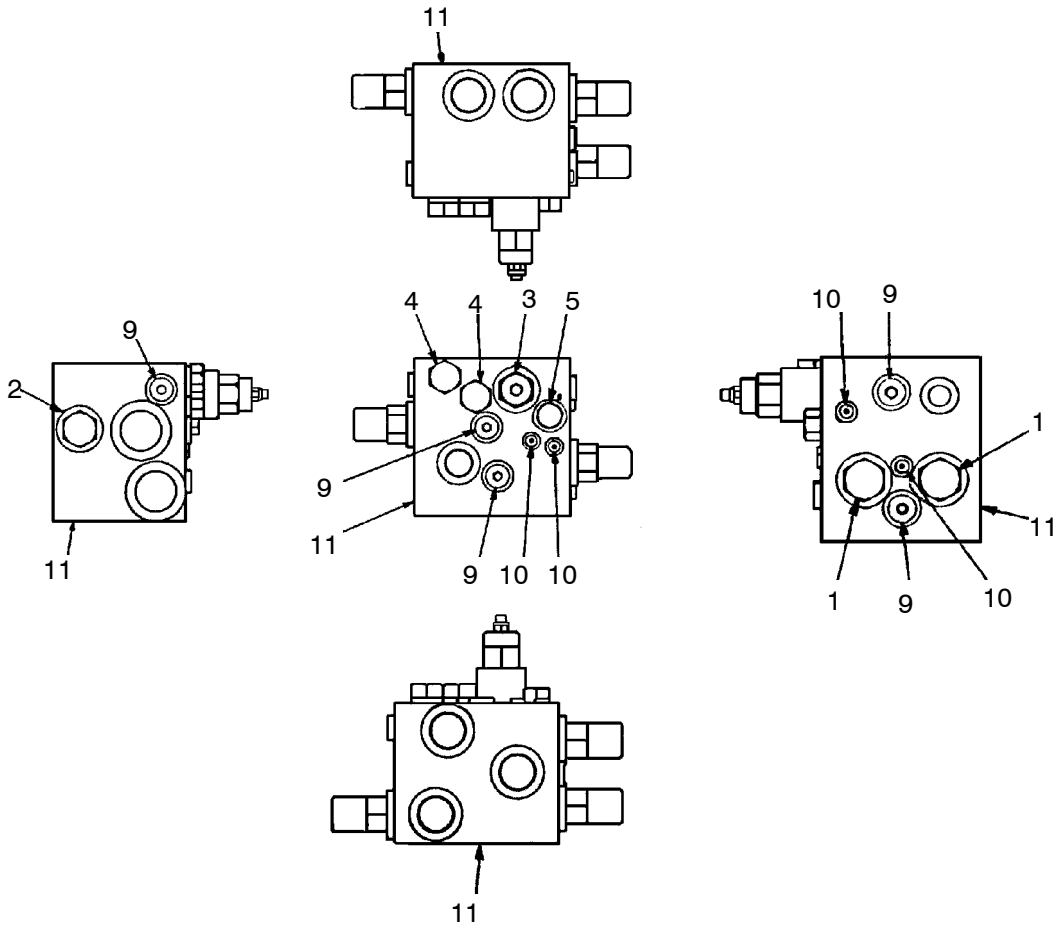

Figure 135 :VALVE, REGEN – HP
E57448144 REV 001

WARNING: This manual contains data SPECIFIC to the drilling rig with serial number: 7341.

57448144 VALVE, REGEN–HP

REF.	PART NO.	QTY.	UNIT	DESCRIPTION
001	57447856	2	EA	VALVE–COUNTERBLNCE VENTED
	57447906	1	EA	● - SEAL KIT–COUNTERBLNCE VLV
002	57447864	1	EA	VALVE–COUNTERBLNCE VENTED
	57447906	1	EA	● - SEAL KIT–COUNTERBLNCE VLV
003	57474876	1	EA	VALVE–SEQUENCE
004	57447880	2	EA	VALVE–CHECK
	57448102	1	EA	● - SEAL KIT–CHECK VALVE
005	57448128	1	EA	PLUG,MANIFOLD–HP
	57439077	1	EA	● - SEAL KIT–CART.VALVES
009	95504015	5	EA	PLUG,1/2–ORING, HEX SOC
010	95926838	4	EA	PLUG,1/8 O–RING–HEX SOC
011	57447849	1	EA	MANIFOLD–FEED CNTRL VLV

57498859 VALVE, 9 SPOOL ASSEMBLY

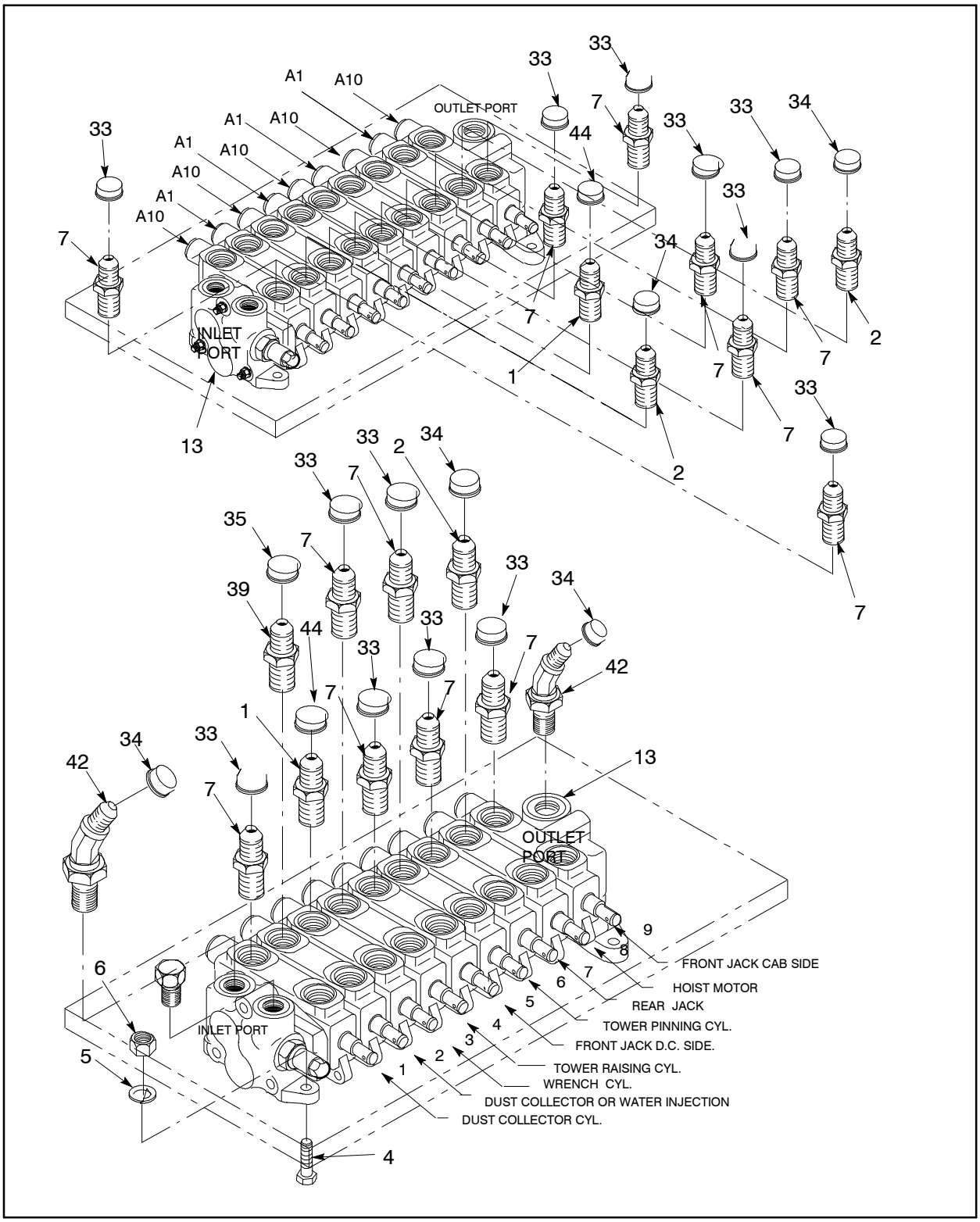

Figure 136 :VALVE, 9 SPOOL ASSEMBLY
E57498859 REV 00

WARNING: This manual contains data SPECIFIC to the drilling rig with serial number: 7341.

57498859 VALVE, 9 SPOOL ASSEMBLY

REF.	PART NO.	QTY.	UNIT	DESCRIPTION	
001	95419594	2	EA	FITTING,HYD	
002	95364949	3	EA	FITTING HYD	
004	95934592	4	EA	SCREW,CAP–3/8–16 X 2–1/4	
005	95937413	4	EA	LOCKWASHER–3/8 PLATED	
006	95922894	4	EA	NUT, HEX–3/8–16	
007	95356903	12	EA	FITTING HYD	
013	57498842	1	EA	VALVE, 9SPL–W/2 RLF SECT	*(See figure 137)*
033	50696731	12	EA	CAP,PLASTIC–9/16–18 THDS	
034	50696756	5	EA	CAP,PLASTIC–1–1/16–12 THD	
035	50696012	1	EA	CAP,PLASTIC–3/4–16 THDS	
039	95303368	1	EA	ADAPTER,STR JIC/O–RING	
042	95433264	2	EA	ELBOW	
044	50699297	2	EA	CAP,PLASTIC–7/16–20 THDS	

VALVE, 9SPL ASSY–W/2 RLF TP: 57498859

57498842 VALVE, 9SPL−W/2 RLF SECT

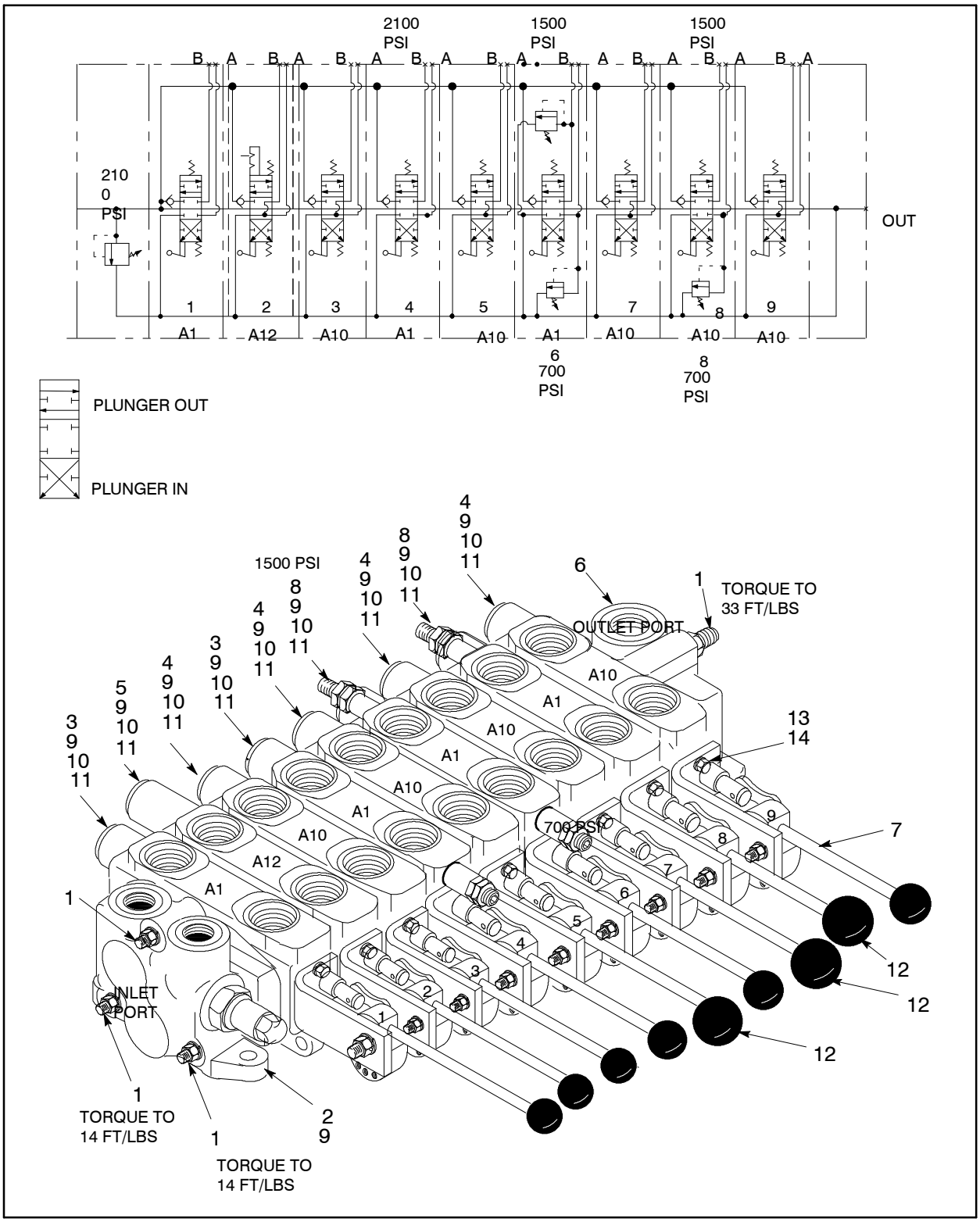

Figure 137 :VALVE, 9SPL−W/2 RLF SECT
D57498842 REV 00

WARNING: This manual contains data SPECIFIC to the drilling rig with serial number: 7341.

57498842 VALVE, 9SPL–W/2 RLF SECT

REF.	PART NO.	QTY.	UNIT	DESCRIPTION	
001	50613769	1	EA	ROD ASSY	
002	50617091	1	EA	SECTION, VALVE INLET	*(See figure 138)*
003	50613199	2	EA	SECTION, VALVE SPOOL	*(See figure 140)*
004	50613207	4	EA	SECTION, VALVE SPOOL	*(See figure 141)*
005	50613215	1	EA	SECTION, VALVE SPOOL	*(See figure 142)*
006	50613181	1	EA	SECTION, VALVE OUTLET	
	50634328	2	EA	● - PLUG	
	95018081	2	EA	● - O–RING	
007	50613728	9	EA	HANDLE ASSY	*(See figure 143)*
008	57327538	2	EA	SECTION	
009	50619014	10	EA	O RING	
010	50618990	9	EA	POPPET	
011	50619006	9	EA	SPRING	
012	50627918	3	EA	BALL, KNOB	
013	95067591	18	EA	SCREW CAP AH	
014	95934766	18	EA	LOCKWASHER–1/4 PLATED	

50617091 SECTION, VALVE INLET

VALVE, 9SPL ASSY–W/2 RLF TP: 5749859

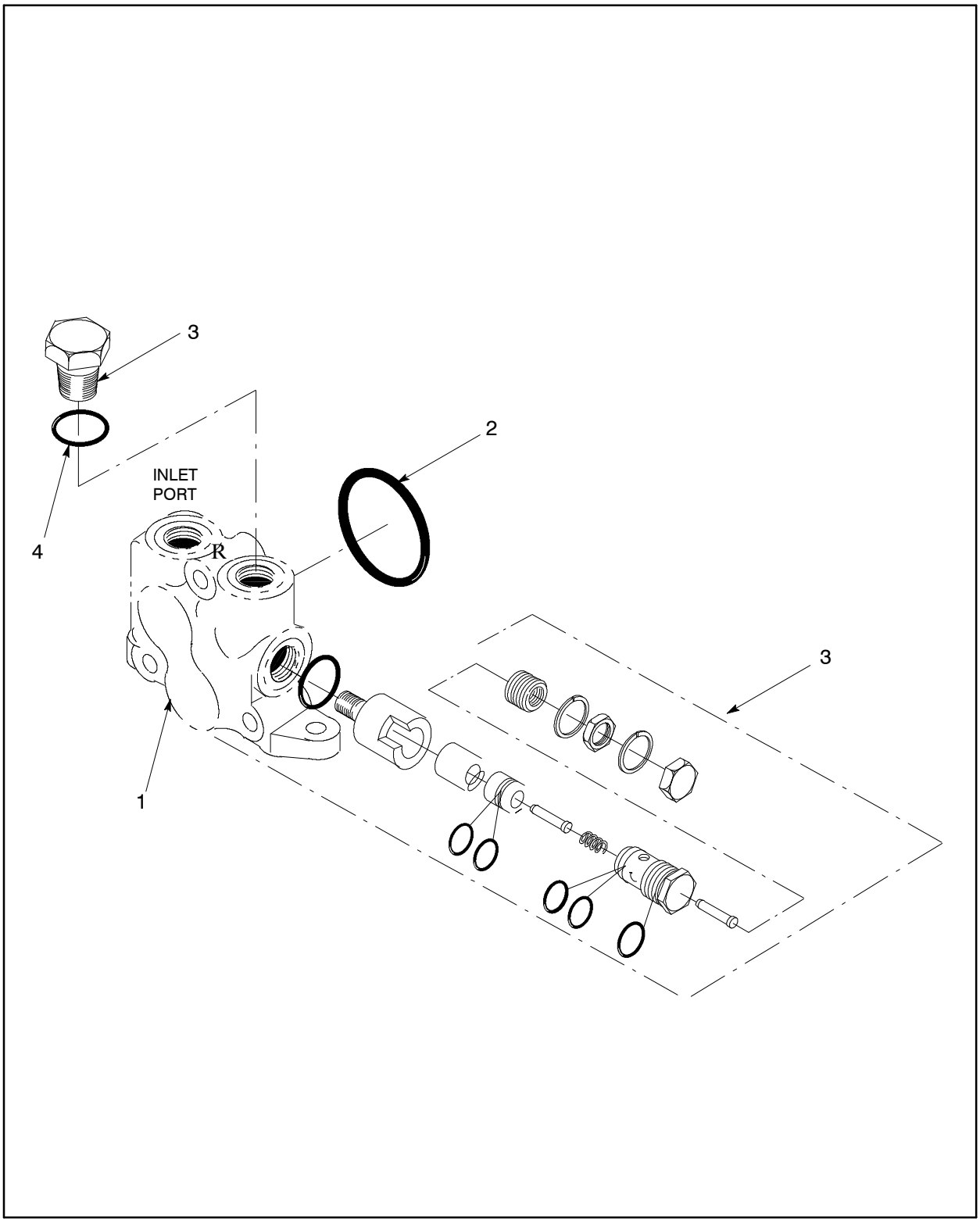

Figure 138 :SECTION, VALVE INLET
Y50613165 REV 00

WARNING: This manual contains data SPECIFIC to the drilling rig with serial number: 7341.

50617091 SECTION, VALVE INLET

REF.	PART NO.	QTY.	UNIT	DESCRIPTION	
002	50619014	1	EA	O RING	
003	50634328	1	EA	PLUG	
004	50605682	1	EA	O-RING	
005	50634336	1	EA	RELIEF	*(See figure 139)*

VALVE, 9SPL ASSY-W/2 RLF TP: 5749859

50634336 RELIEF

VALVE, 9SPL ASSY-W/2 RLF TP: 57498859

There is no drawing available at this time.

Figure 139 :RELIEF
00000000 REV 00

50634336 RELIEF

REF.	PART NO.	QTY.	UNIT	DESCRIPTION
001	50634344	1	EA	CAP
002	50605682	1	EA	O-RING
003	50634351	1	EA	PILOT SECTON
004	50605732	1	EA	O-RING
005	50605690	1	EA	O-RING
006	50605724	1	EA	RING,BACK-UP
007	50605708	1	EA	O-RING
008	50605716	1	EA	RING,BACK-UP
009	50634369	1	EA	POPPET
010	50634377	1	EA	PISTON
011	50634385	1	EA	SPRING
012	50634393	1	EA	POPPET
013	50635945	1	EA	NUT
014	50635952	2	EA	WASHER
015	50635960	1	EA	NUT
016	50635978	1	EA	SCREW
017	50635986	1	EA	SPRING
018	50635994	1	EA	POPPET

VALVE, 9SPL ASSY-W/2 RLF TP: 5749859

50613199 SECTION, VALVE SPOOL

VALVE, 9SPL ASSY–W/2 RLF TP: 57498859

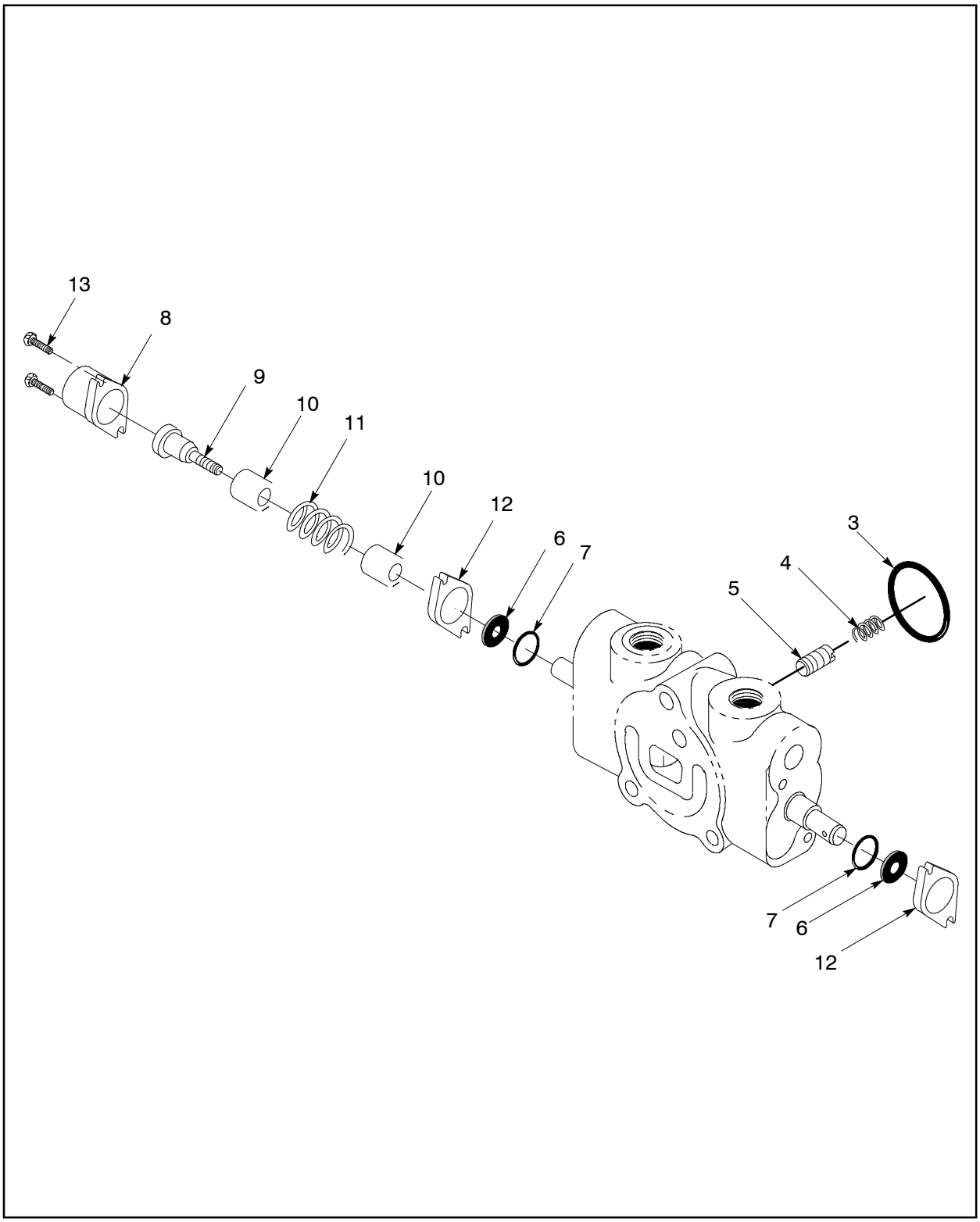

Figure 140 :SECTION, VALVE SPOOL
Y347387 REV 00

WARNING: This manual contains data SPECIFIC to the drilling rig with serial number: 7341.

50613199 SECTION, VALVE SPOOL

REF.	PART NO.	QTY.	UNIT	DESCRIPTION
003	50619014	1	EA	O RING
004	50619006	1	EA	SPRING
005	50618990	1	EA	POPPET
006	50605740	2	EA	SEAL
007	50605757	2	EA	O-RING
008	50636018	1	EA	CAP
009	50636026	1	EA	SCREW, ADJUSTING
010	50636034	2	EA	SEAT
011	50636042	1	EA	SPRING
012	50636059	1	EA	PLATE
013	50636000	2	EA	SCREW

VALVE, 9SPL ASSY-W/2 RLF TP: 5749859

50613207 SECTION, VALVE SPOOL

VALVE, 9SPL ASSY–W/2 RLF TP: 57498859

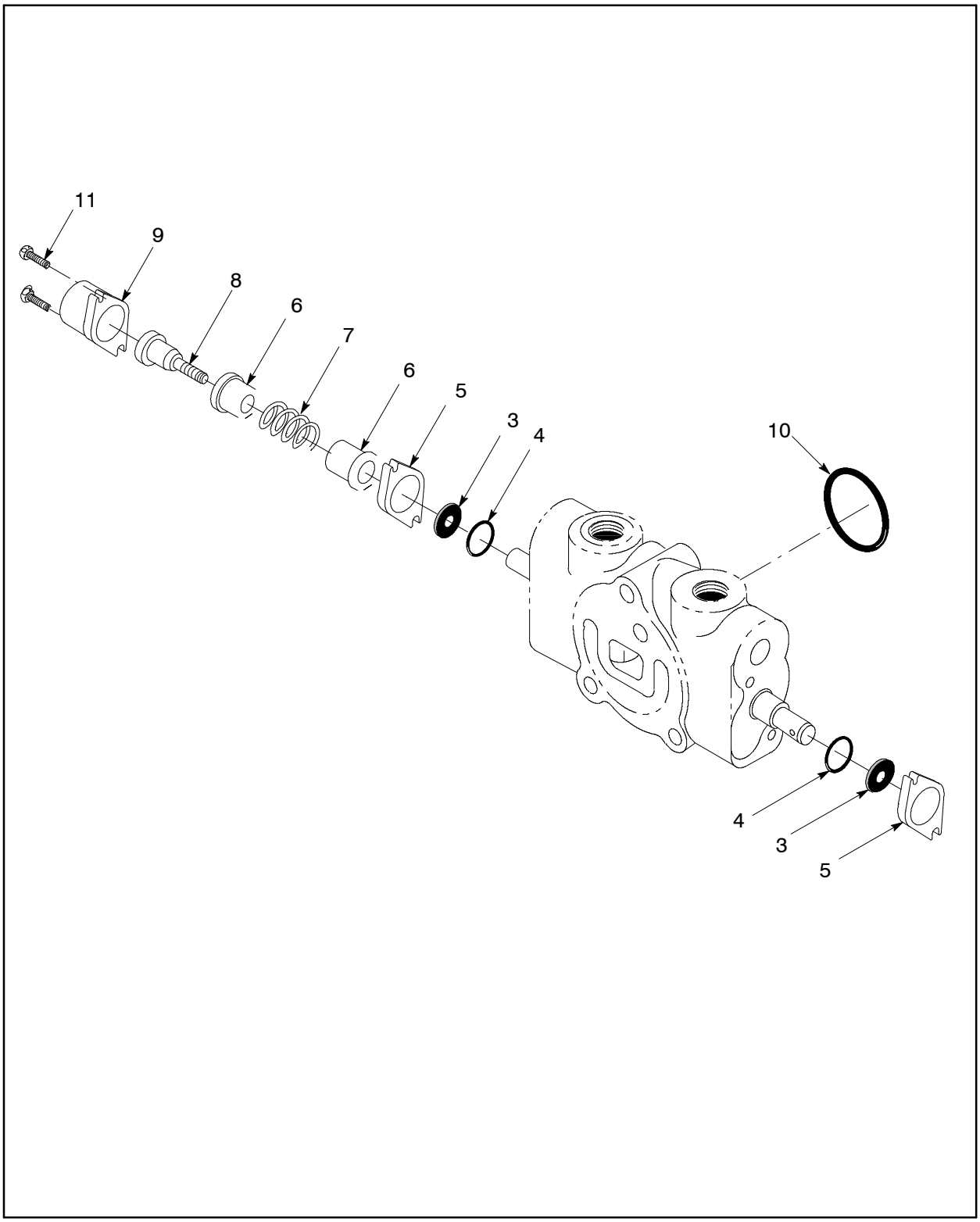

Figure 141 :SECTION, VALVE SPOOL
Y347390 REV 00

WARNING: This manual contains data SPECIFIC to the drilling rig with serial number: 7341.

50613207 SECTION, VALVE SPOOL

REF.	PART NO.	QTY.	UNIT	DESCRIPTION
003	50605740	2	EA	SEAL
004	50605757	2	EA	O-RING
005	50636059	1	EA	PLATE
006	50636034	2	EA	SEAT
007	50636042	1	EA	SPRING
008	50636026	1	EA	SCREW, ADJUSTING
009	50636018	1	EA	CAP
010	50619014	1	EA	O RING
011	50636000	2	EA	SCREW

VALVE, 9SPL ASSY-W/2 RLF TP: 5749859

50613215 SECTION, VALVE SPOOL

VALVE, 9SPL ASSY–W/2 RLF TP: 57498859

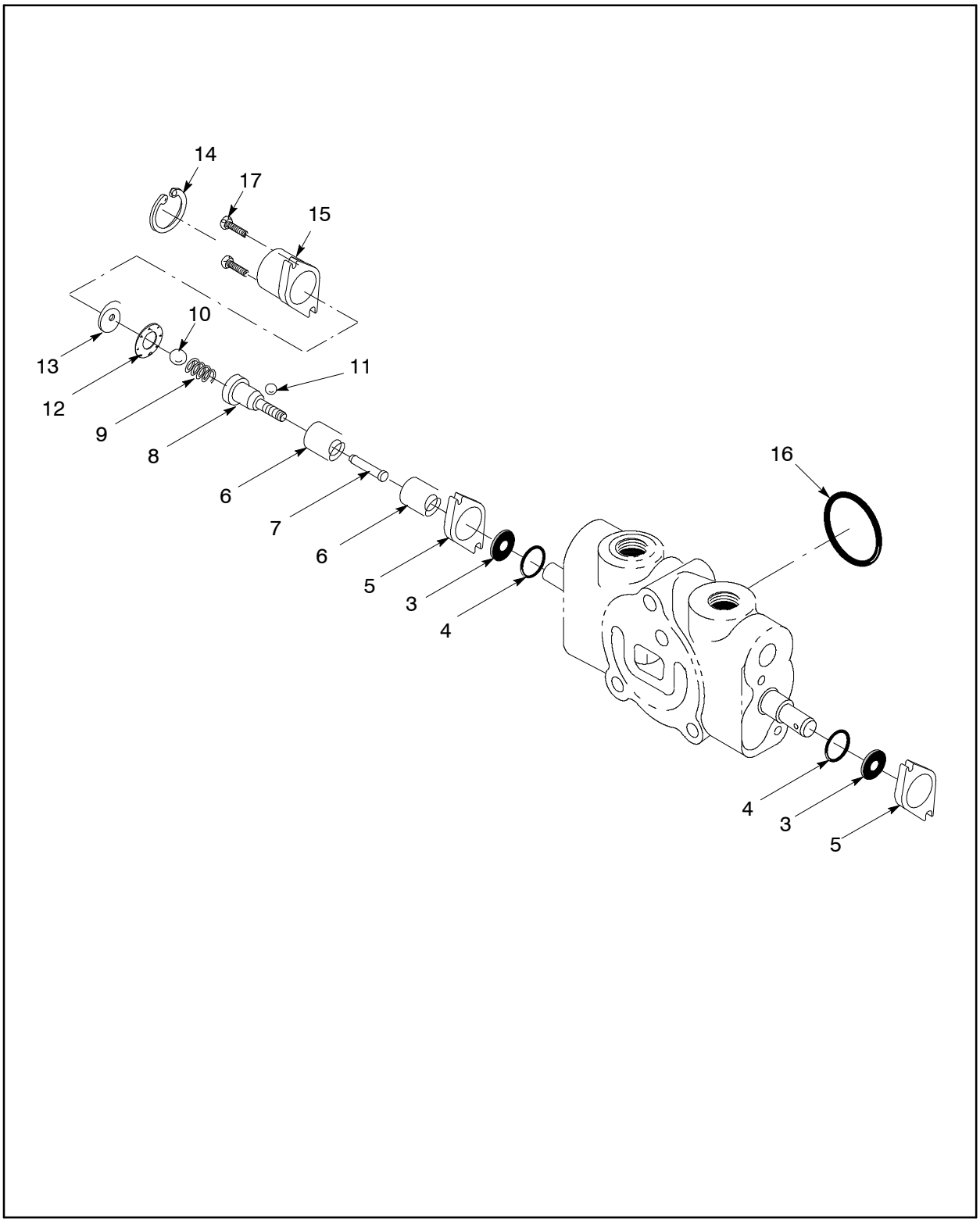

Figure 142 :SECTION, VALVE SPOOL
Y347385 REV 00

WARNING: This manual contains data SPECIFIC to the drilling rig with serial number: 7341.

50613215 SECTION, VALVE SPOOL

REF.	PART NO.	QTY.	UNIT	DESCRIPTION
003	50605740	2	EA	SEAL
004	50605757	2	EA	O-RING
005	50636059	1	EA	PLATE
006	50636034	2	EA	SEAT
007	50636042	1	EA	SPRING
008	52141736	1	EA	PIN
009	52141744	1	EA	SPRING
010	52141751	1	EA	BALL
011	52141769	7	EA	BALL
013	52141785	1	EA	SPACER
014	52141793	1	EA	RING,RETAING
015	52141801	1	EA	CAP
016	50619014	1	EA	O RING
017	50636000	2	EA	SCREW

VALVE, 9SPL ASSY-W/2 RLF TP: 5749859

50613728 HANDLE ASSY

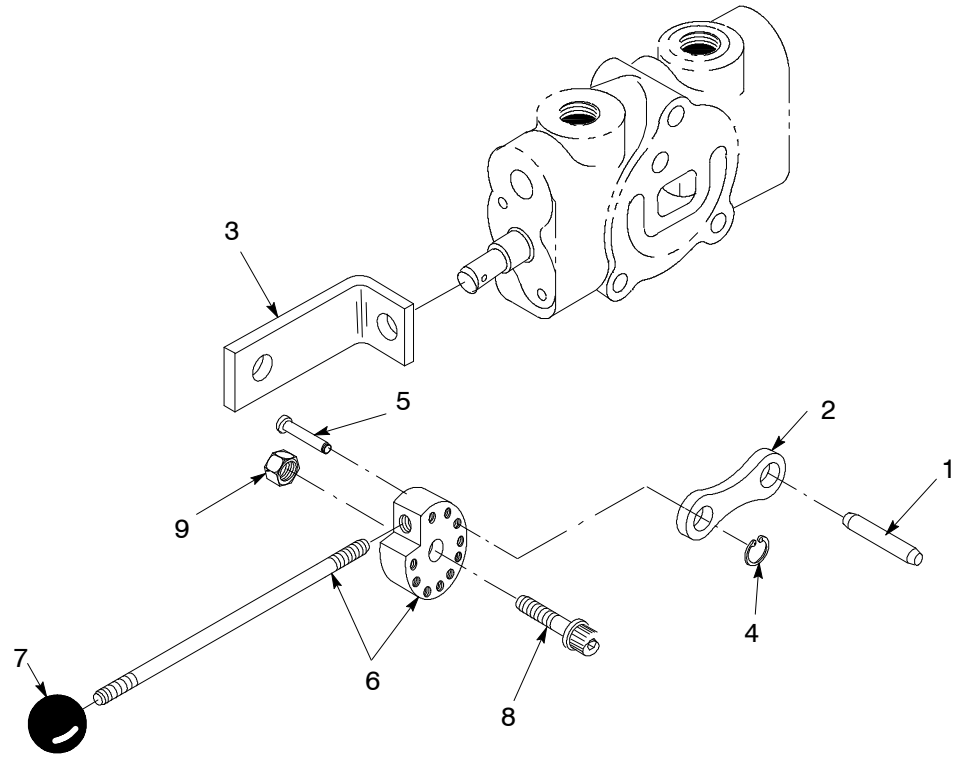

Figure 143 :HANDLE ASSY
Y347391 REV 01

WARNING: This manual contains data SPECIFIC to the drilling rig with serial number: 7341.

50613728 HANDLE ASSY

REF.	PART NO.	QTY.	UNIT	DESCRIPTION
001	50668078	1	EA	ROLL PIN
002	50668060	1	EA	LINK
003	58176207	1	EA	LEVER BRKT
004	95780060	1	EA	RETAIN RING
005	50830322	1	EA	PIN
006	50830348	1	EA	LEVER
007	50830355	1	EA	KNOB,BLACK
008	50830363	1	EA	SCREW
009	95929782	1	EA	NUT, HEX–5/16–18

57450629 PIPING,MAIN HYD–CLSDLOOP

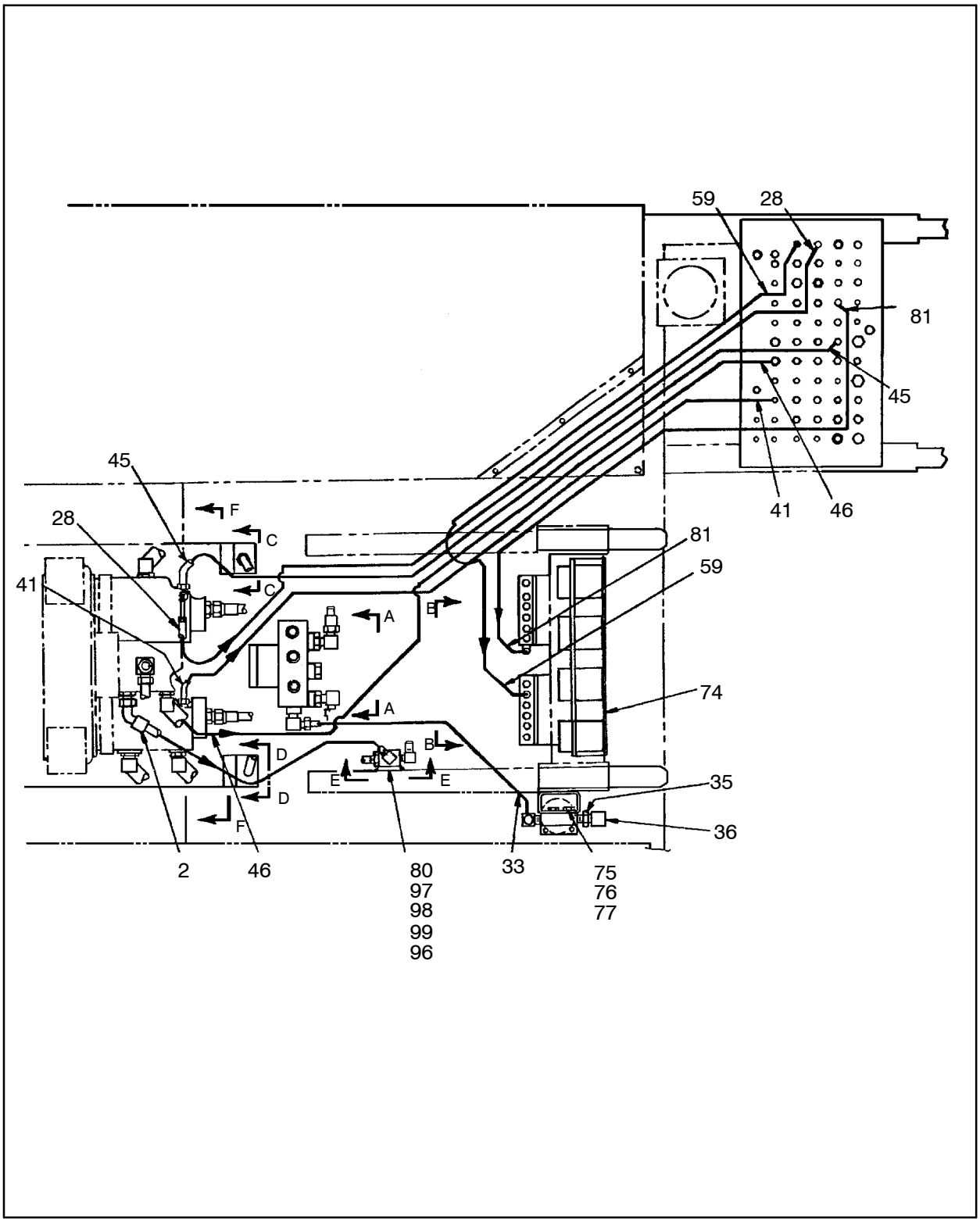

Figure 144 :PIPING,MAIN HYD–CLSDLOOP
E57450629 REV 02

WARNING: This manual contains data SPECIFIC to the drilling rig with serial number: 7341.

57450629 PIPING,MAIN HYD–CLSDLOOP

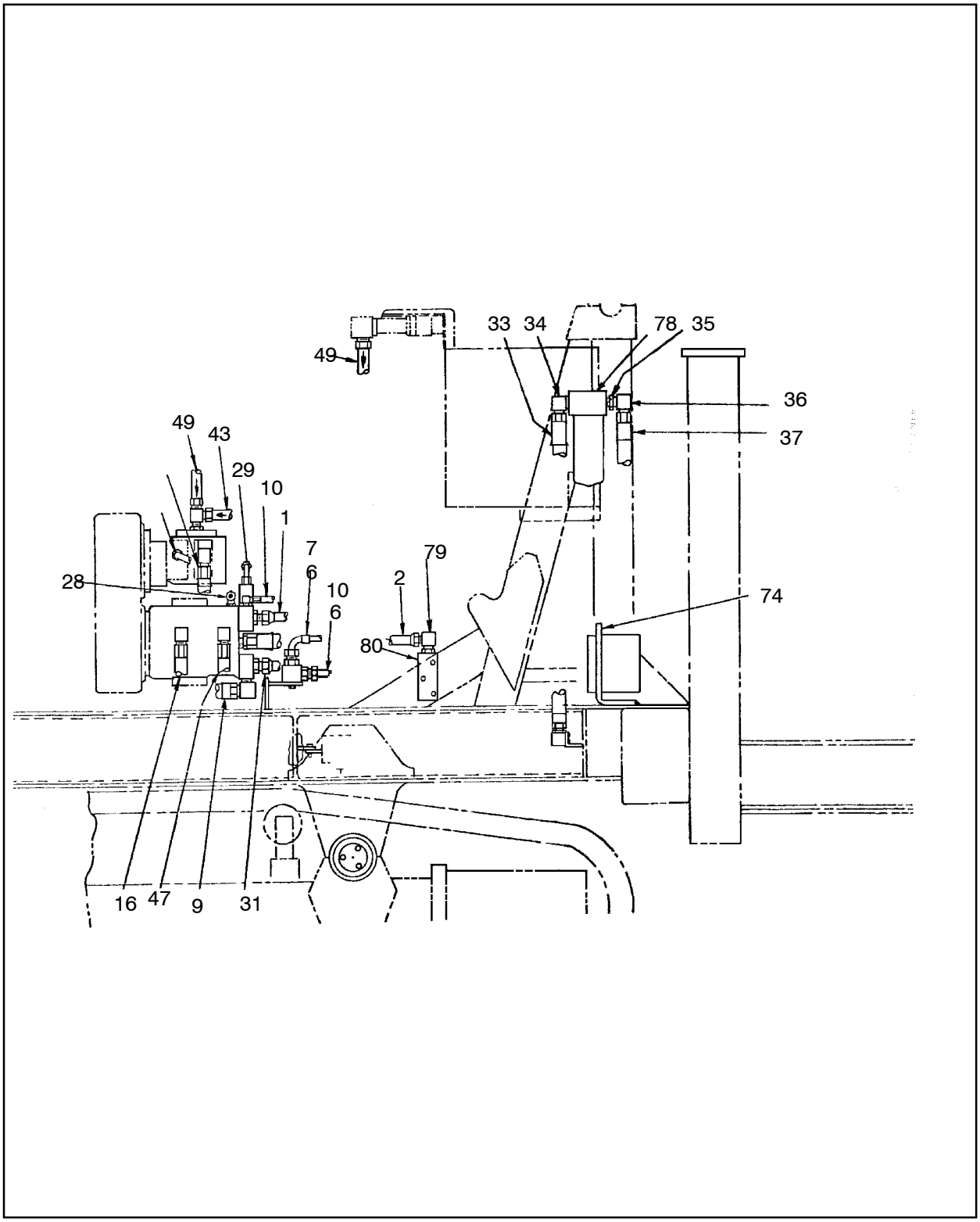

Figure 145 :PIPING,MAIN HYD–CLSDLOOP
E57450629 REV 02

57450629 PIPING,MAIN HYD–CLSDLOOP

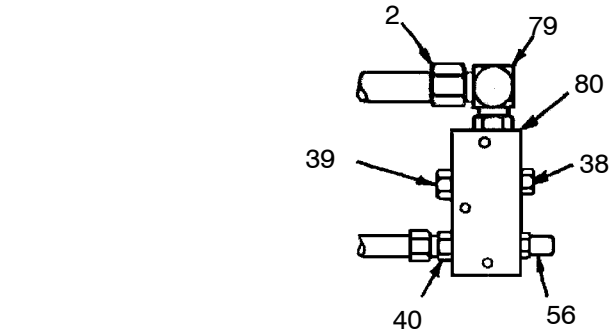

VIEW E–E

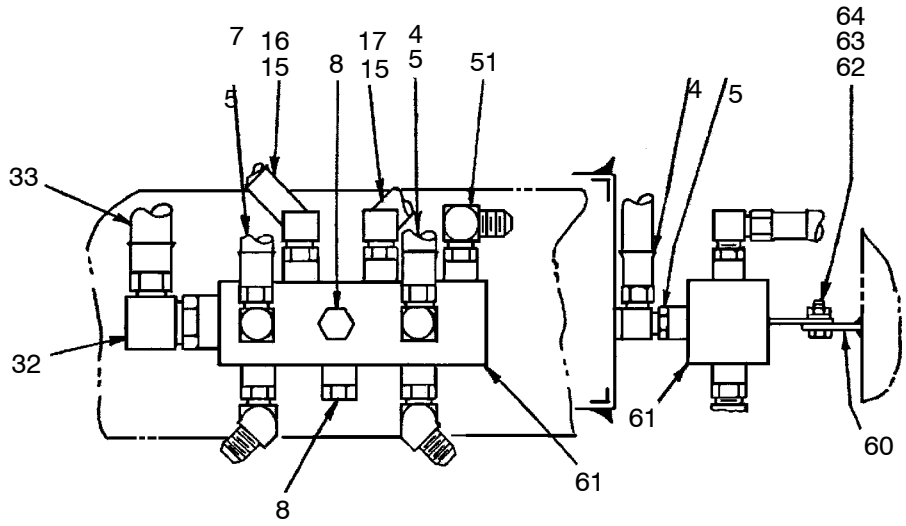

VIEW A–A

Figure 146 :PIPING,MAIN HYD–CLSDLOOP
E57450629 REV 02

WARNING: This manual contains data SPECIFIC to the drilling rig with serial number: 7341.

57450629 PIPING,MAIN HYD–CLSDLOOP

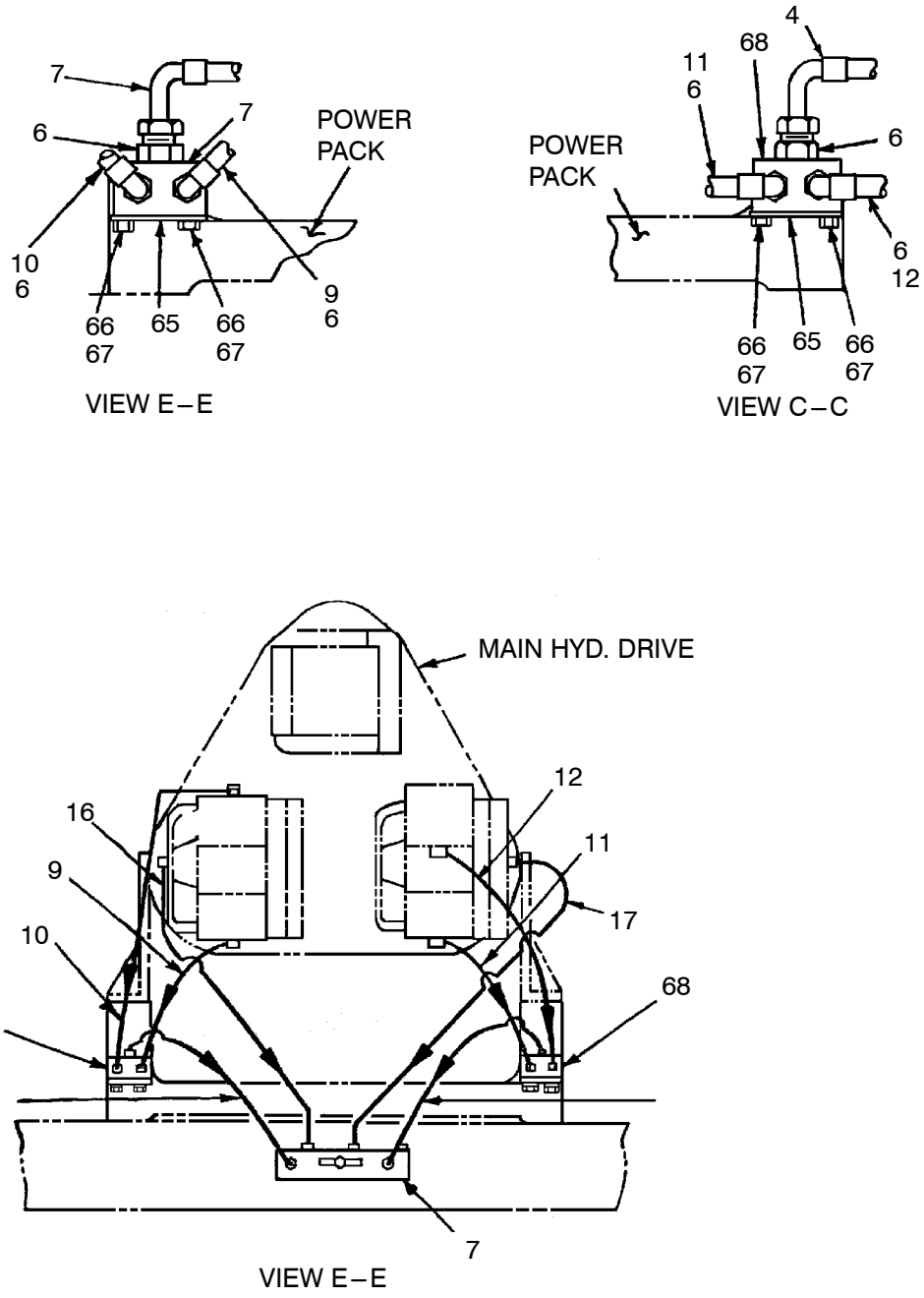

Figure 147 :PIPING,MAIN HYD–CLSDLOOP
E57450629 REV 02

57450629 PIPING,MAIN HYD–CLSDLOOP

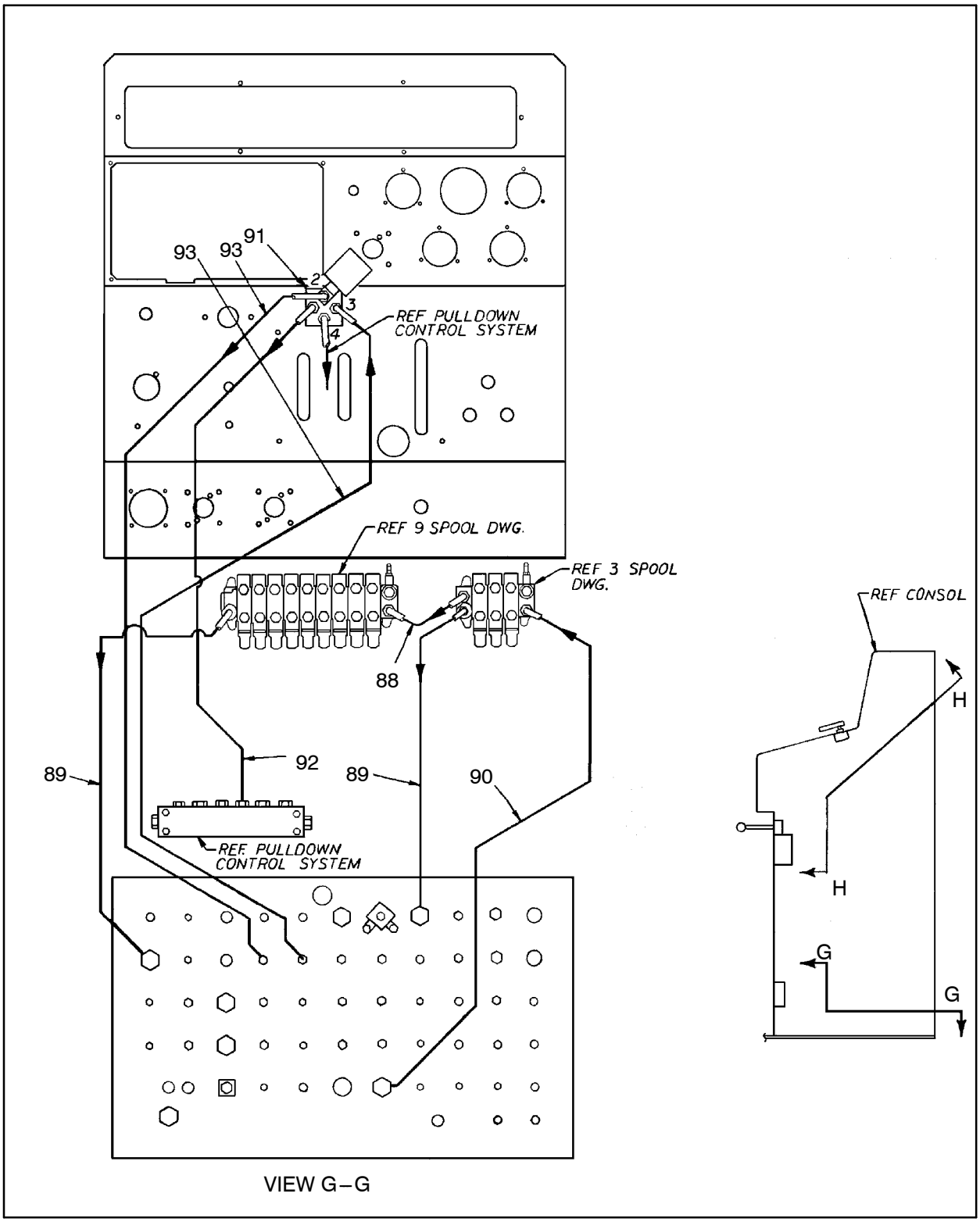

Figure 148 :PIPING,MAIN HYD–CLSDLOOP
E57450629 REV 02

WARNING: This manual contains data SPECIFIC to the drilling rig with serial number: 7341.

57450629 PIPING,MAIN HYD–CLSDLOOP

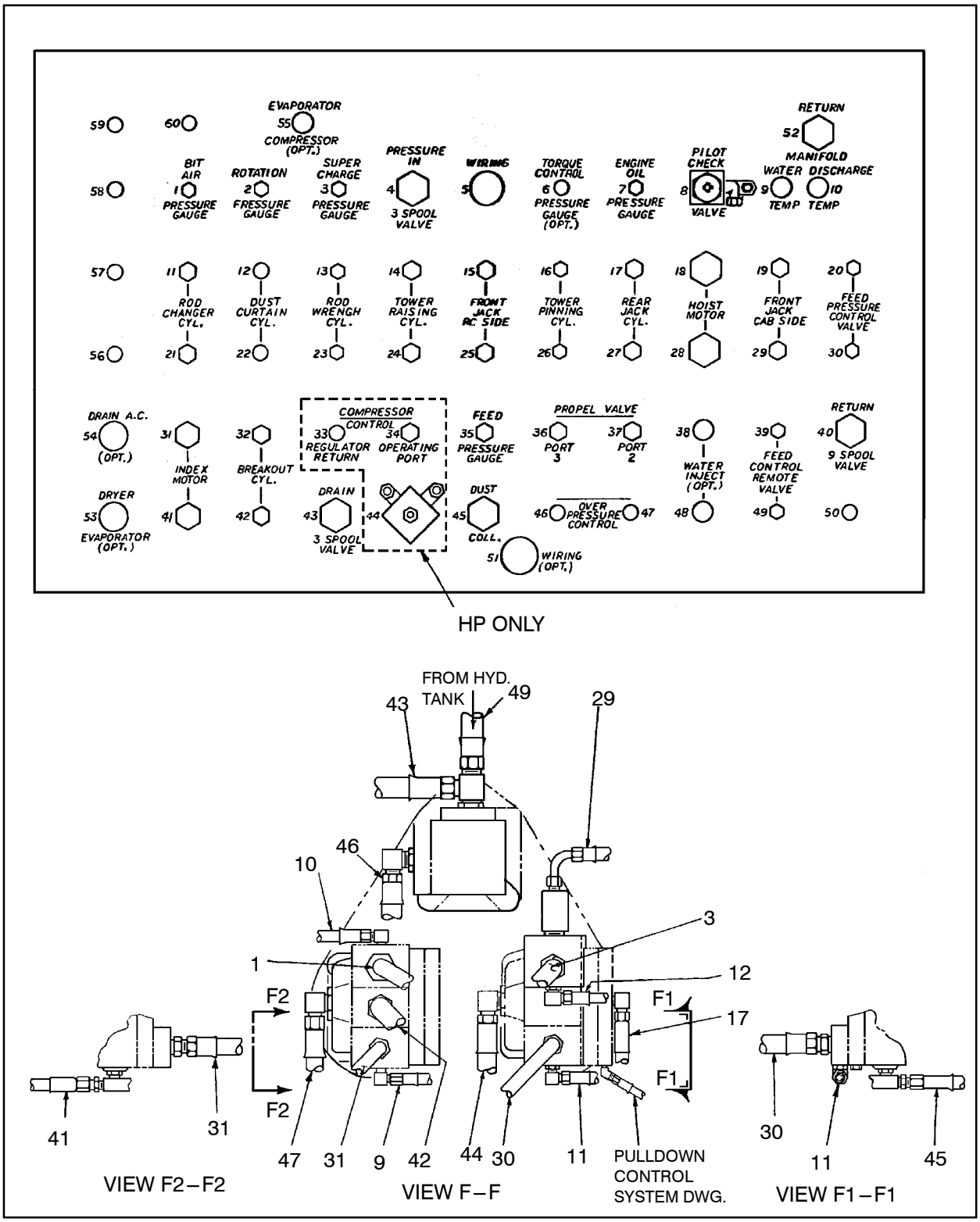

Figure 149 :PIPING,MAIN HYD–CLSDLOOP
E57450629 REV 02

57450629 PIPING,MAIN HYD–CLSDLOOP

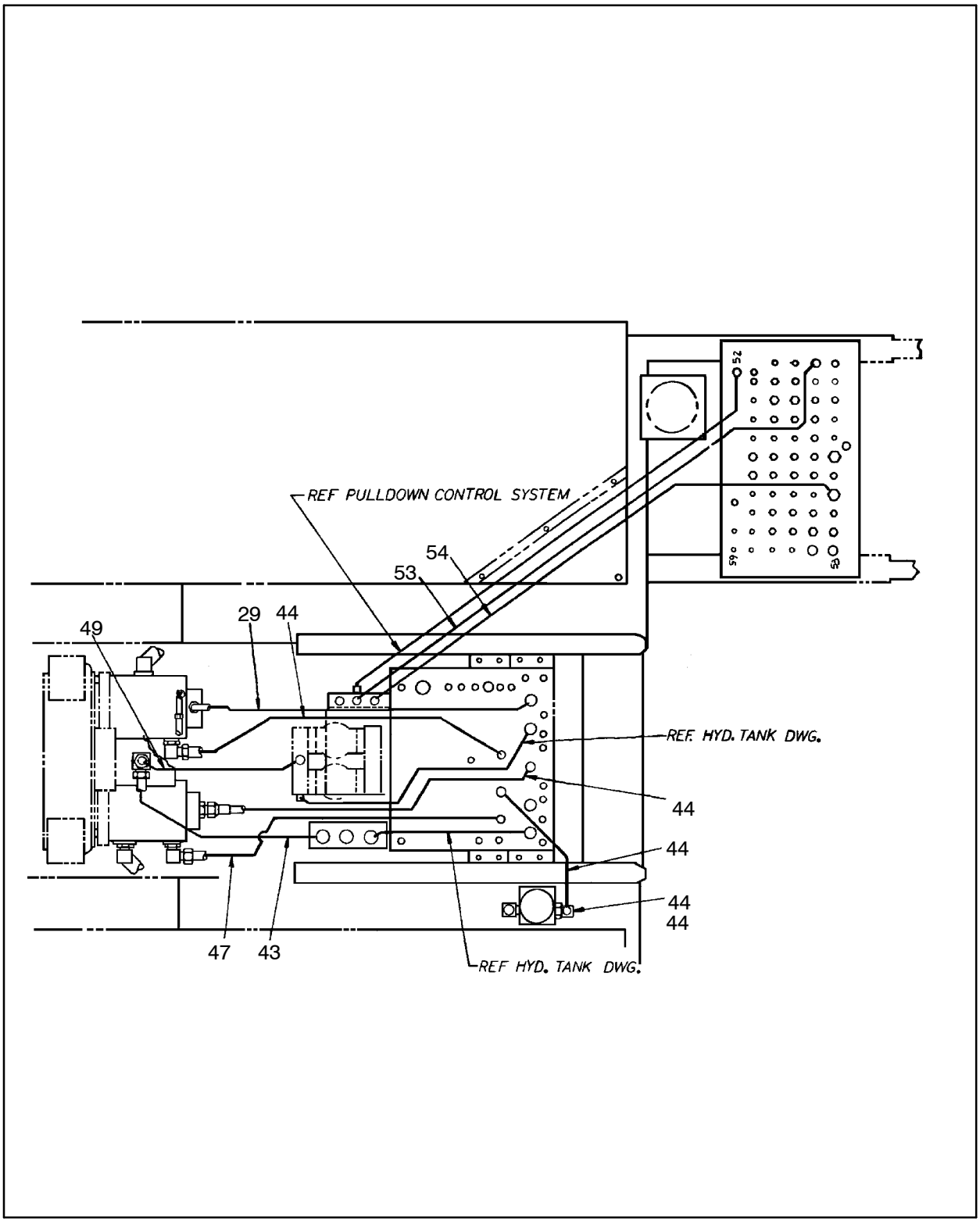

Figure 150 :PIPING,MAIN HYD–CLSDLOOP
E57450629 REV 02

WARNING: This manual contains data SPECIFIC to the drilling rig with serial number: 7341.

57450629 PIPING,MAIN HYD–CLSDLOOP

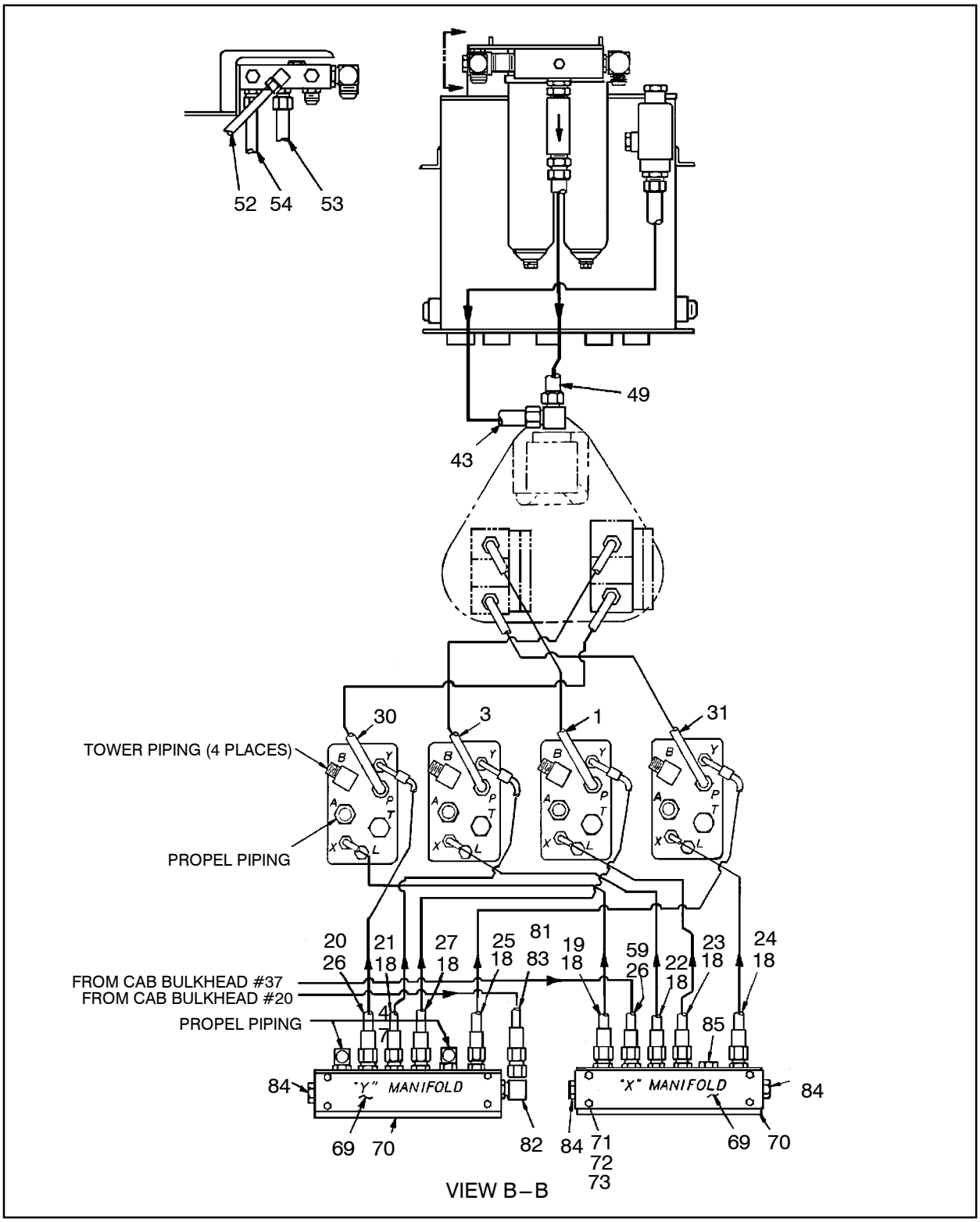

Figure 151 :PIPING,MAIN HYD–CLSDLOOP
E57450629 REV 02

57450629 PIPING,MAIN HYD–CLSDLOOP

REF.	PART NO.	QTY.	UNIT	DESCRIPTION
001	57342651	1	EA	HOSE ASSY
002	57480741	1	EA	HOSE ASSY
003	57342651	1	EA	HOSE ASSY
004	56955644	1	EA	HOSE ASSY
005	95330692	2	EA	ADAPTER, 90DEG–O–RING/JIC
006	95303368	6	EA	ADAPTER, STR–JIC/O–RING
007	56955644	1	EA	HOSE ASSY
008	95664934	2	EA	PLUG, 1–1/16–12
009	56957632	1	EA	HOSE ASSY
010	57480774	1	EA	HOSE ASSY
011	56957632	1	EA	HOSE ASSY
012	57480774	1	EA	HOSE ASSY
015	57167934	2	EA	FITTING, L90–120FS X12SAE
016	57464018	1	EA	HOSE ASSY
017	57464018	1	EA	HOSE ASSY
018	95371258	7	EA	FITTING, HYD
019	52226420	1	EA	HOSE ASSY
020	57101438	1	EA	HOSE ASSY
021	57101438	1	EA	HOSE ASSY
022	57101263	1	EA	HOSE ASSY
023	57015505	1	EA	HOSE ASSY
024	57015505	1	EA	HOSE ASSY
025	57101164	1	EA	HOSE ASSY
026	95419594	2	EA	FITTING, HYD
027	57020703	1	EA	HOSE ASSY
028	57020836	1	EA	HOSE ASSY
029	57480790	1	EA	HOSE ASSY
030	57342651	1	EA	HOSE ASSY
031	57342651	1	EA	HOSE ASSY
032	95829362	1	EA	FITTING, HYD
033	57480808	1	EA	HOSE ASSY
034	95286555	1	EA	FITTING HYD
035	52226164	1	EA	FITTING, HYD
036	95219853	1	EA	FITTING, HYD
037	56974140	1	EA	HOSE ASSY
038	95323465	1	EA	PLUG HEAD
039	95361028	1	EA	PLUG–W/O–RNG

WARNING: This manual contains data SPECIFIC to the drilling rig with serial number: 7341.

57450629 PIPING,MAIN HYD–CLSDLOOP

REF.	PART NO.	QTY.	UNIT	DESCRIPTION	
040	95402830	1	EA	FITTING	
041	56974587	1	EA	HOSE ASSY	
042	56953912	1	EA	HOSE ASSY	
043	57347429	1	EA	HOSE ASSY	
044	52197860	1	EA	HOSE ASSY	
045	58154329	1	EA	HOSE ASSY	
046	57397960	1	EA	HOSE ASSY	
047	52197860	1	EA	HOSE ASSY	
049	57277402	1	EA	HOSE ASSY	
051	95280186	1	EA	FITTING, HYD	
053	57330276	1	EA	HOSE ASSY	
054	56957830	1	EA	HOSE ASSY	
056	95356903	1	EA	FITTING, HYD	
059	58144585	1	EA	HOSE ASSY	
060	50348804	1	EA	PLATE	
061	57431983	1	EA	MANIFOLD,RETURN SAE PORTS	
	57348146	9	EA	● - COUPLING SAE HALF	
	57348468	1	EA	● - COUPLING, SAE HALF	
062	95104188	2	EA	SCREW, CAP–1/2–13 X 1–3/4	
063	95077798	2	EA	NUT, HEX–1/2–13	
064	95081824	2	EA	WASHER, LOCK–1/2	
065	57244980	2	EA	PLATE, MTG	
066	95934576	4	EA	SCREW,CAP–3/8–16 X 7/8	
067	95937413	4	EA	WASHER, LOCK–3/8 PLATED	
068	57244352	2	EA	VALVE, PUMP RELIEF	
068	57328676	2	EA	FITTING, TEST	
069	57350076	2	EA	MANIFOLD,HYD. ORING THDS	
070	56970601	2	EA	BRACKET	
071	95958369	8	EA	SCREW, CAP–1/4–20 X 2–3/4	
072	95931564	8	EA	NUT, HEX–1/4–20	
073	95934766	8	EA	WASHER, LOCK–1/4 PLATED	
074	57450751	1	AS	VALVE ASSY, DIVERTER *	*(See figure 152)*
075	95934550	2	EA	SCREW, CAP–3/8–16 X 3/4	
076	57361578	1	EA	BRACKET, FILTER	
077	95937413	2	EA	WASHER, LOCK–3/8 PLATED	
078	50630656	1	EA	FILTER, MAGNETIC	*(See figure 154)*
079	95829362	1	EA	FITTING, HYD	

57450629 PIPING,MAIN HYD–CLSDLOOP

REF.	PART NO.	QTY.	UNIT	DESCRIPTION		
080	57024044	1	EA	BLOCK, MANIFOLD		
081	58143439	1	EA	HOSE ASSY		
082	95330692	1	EA	ADAPTER, 90DEG–O–RING/JIC		
083	56919004	1	EA	FITTING, HYD		
084	95664934	3	EA	PLUG, 1–1/16–12		
085	95653317	1	EA	FITTING, HYD		
088	58042730	1	EA	HOSE ASSY		
089	56987936	2	EA	HOSE ASSY		
090	56987910	1	EA	HOSE ASSY		
091	57169997	1	AS	VALVE ASSEMBLY	*	*(See figure 155)*
092	56949407	1	EA	HOSE ASSY		
093	57044521	2	EA	HOSE ASSY		
096	57329583	1	EA	SUBPLATE, MANIFOLD		
097	95934600	3	EA	SCREW,CAP–3/8–16 X 3–1/2		
098	95937413	3	EA	WASHER, LOCK–3/8 PLATED		
099	95922233	3	EA	WASHER, FLAT–3/8		

WARNING: This manual contains data SPECIFIC to the drilling rig with serial number: 7341.

57450629 PIPING,MAIN HYD–CLSDLOOP

This page is blank.

57450751 VALVE ASSY, DIVERTER *

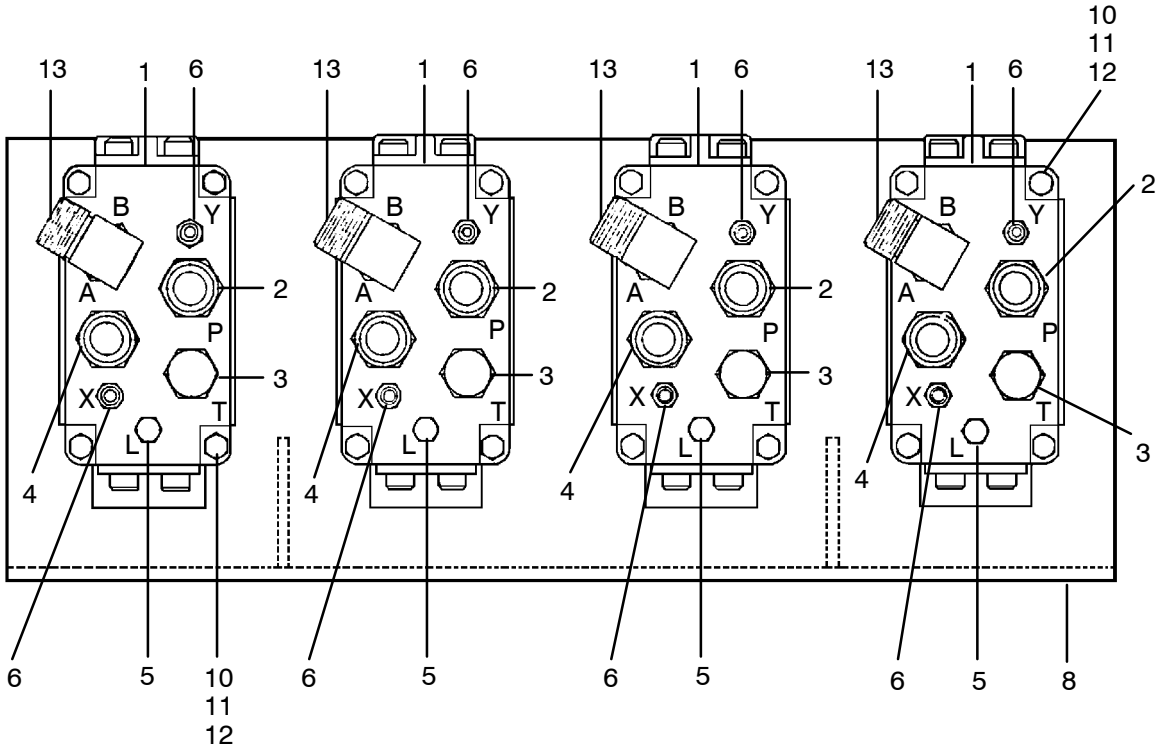

**Figure 152 :VALVE ASSY, DIVERTER *
D57450751 REV 02**

57450751 VALVE ASSY, DIVERTER *

REF.	PART NO.	QTY.	UNIT	DESCRIPTION	
001	57106429	4	EA	VALVE, DIVERTER	*(See figure 153)*
002	57279622	4	EA	FITTING,STR,20OFS X 16SAE	
003	95735346	4	EA	FITTING, HYD	
004	57319683	4	EA	FITTING,STR,16OFS X 16SAE	
005	95666996	4	EA	FITTING, HYD	
006	95371258	8	EA	FITTING, HYD	
008	57454910	1	EA	MOUNT, DIVERTER VALVE	
010	95934592	16	EA	SCREW, CAP-3/8-16 X 2-1/4	
011	95937413	16	EA	WASHER, LOCK-3/8 PLATED	
012	95922894	16	EA	NUT, HEX-3/8-16	
013	57214116	4	EA	FITTING,L90,20OFS X 16SAE	
039	95035440	4	EA	SCREW, CAP-3/4-UNC X 2(NOT SHOWN)	

57106429 VALVE, DIVERTER

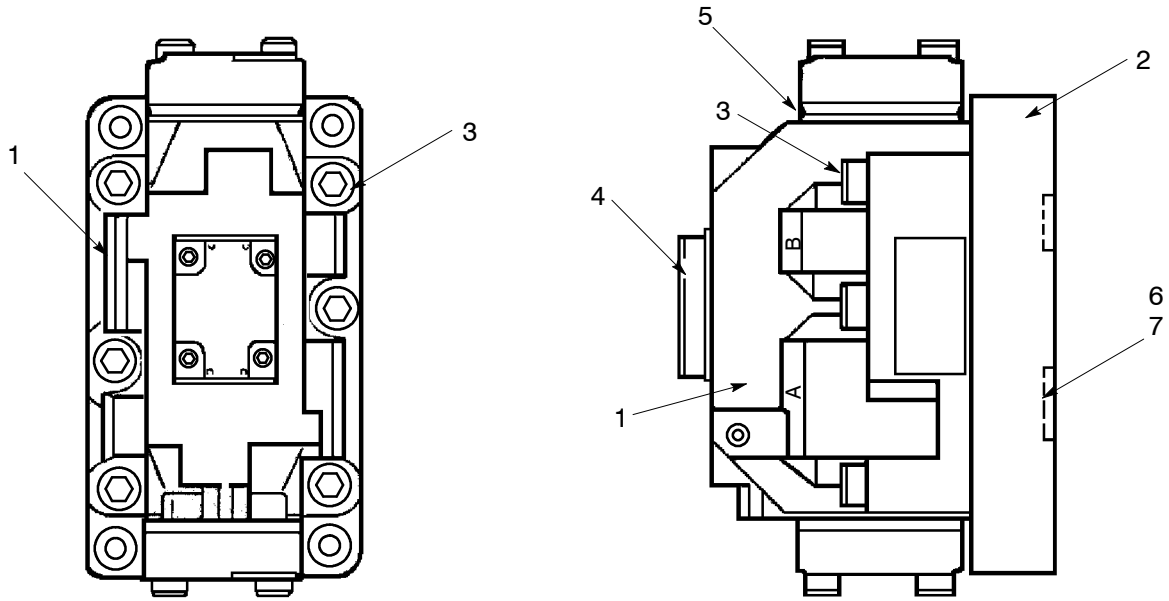

Figure 153 :VALVE, DIVERTER
D57106429 REV02

57106429 VALVE, DIVERTER

REF.	PART NO.	QTY.	UNIT	DESCRIPTION
001	57106460	1	EA	VALVE, 4–WAY
	57107914	1	EA	● - KIT,SEAL
002	57106965	1	EA	SUBPLATE
003	51076271	1	EA	BOLT KIT
004	57107906	2	EA	O–RING
005	51076156	2	EA	O–RING
006	51076172	2	EA	O–RING
007	51076164	4	EA	O–RING
008	57107914	0	EA	KIT,SEAL (NOT SHOWN)

50630656 FILTER, MAGNETIC

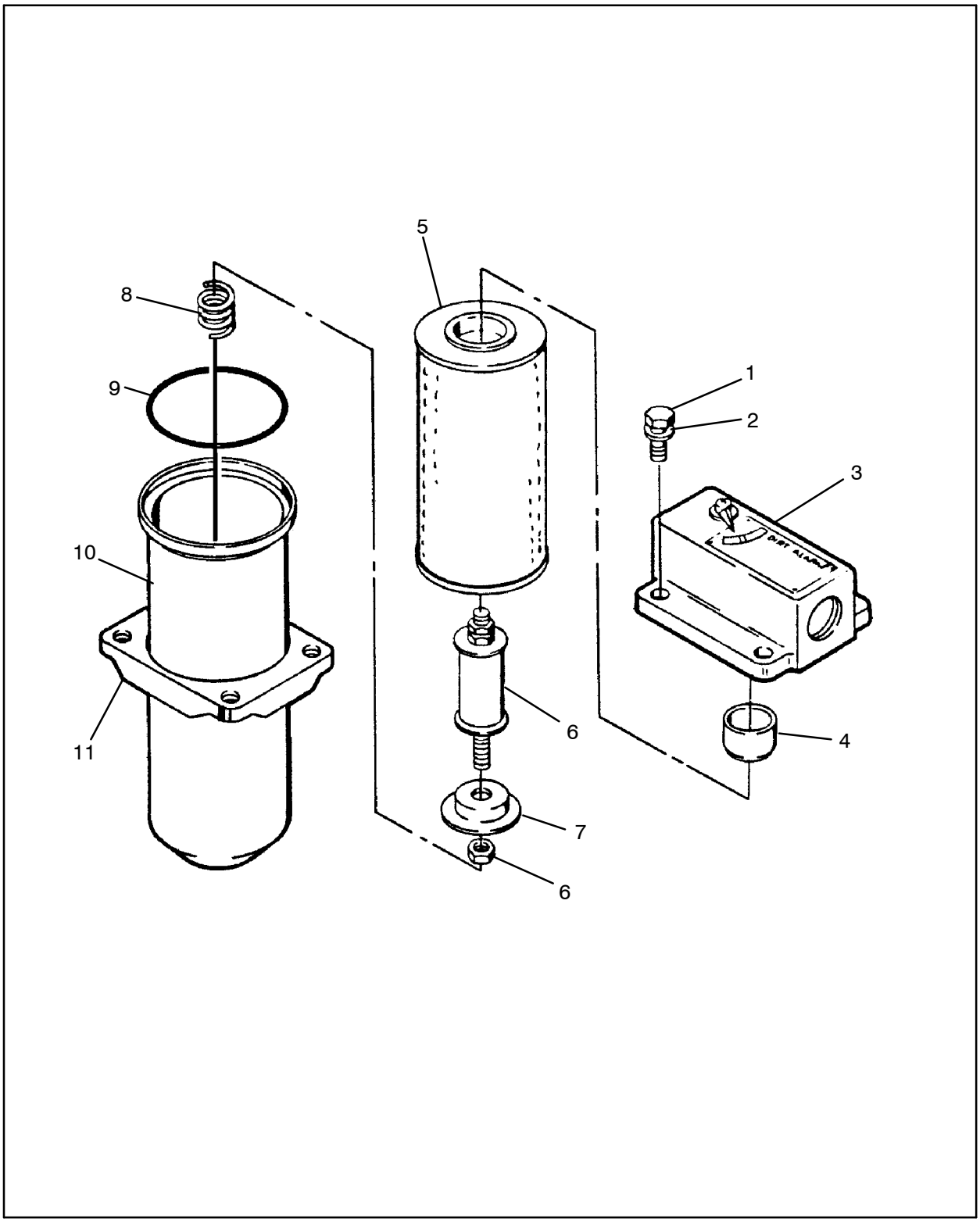

Figure 154 :FILTER, MAGNETIC
W348725 REV02

50630656 FILTER, MAGNETIC

REF.	PART NO.	QTY.	UNIT	DESCRIPTION
001	95104170	4	EA	SCREW, CAP-1/2-13 X 1-1/2
002	95081667	4	EA	WASHER, FLAT-1/2
003	50815646	1	EA	ALARM, DIRTY FILTER
004	50815653	1	EA	ELEMENT, FILTER
005	50343490	1	EA	ELEMENT, FILTER-3 MICRON
006	50815661	1	EA	MAGNET ASSY
007	50815679	1	EA	SPRING PLATE
008	50709336	1	EA	SPRING, COMPRESSION
009	50815695	1	EA	O-RING
010	50815703	1	EA	HOUSING, SINGLE ELEMENT
011	50815711	1	EA	RING,RETAING

57169997 VALVE ASSEMBLY *

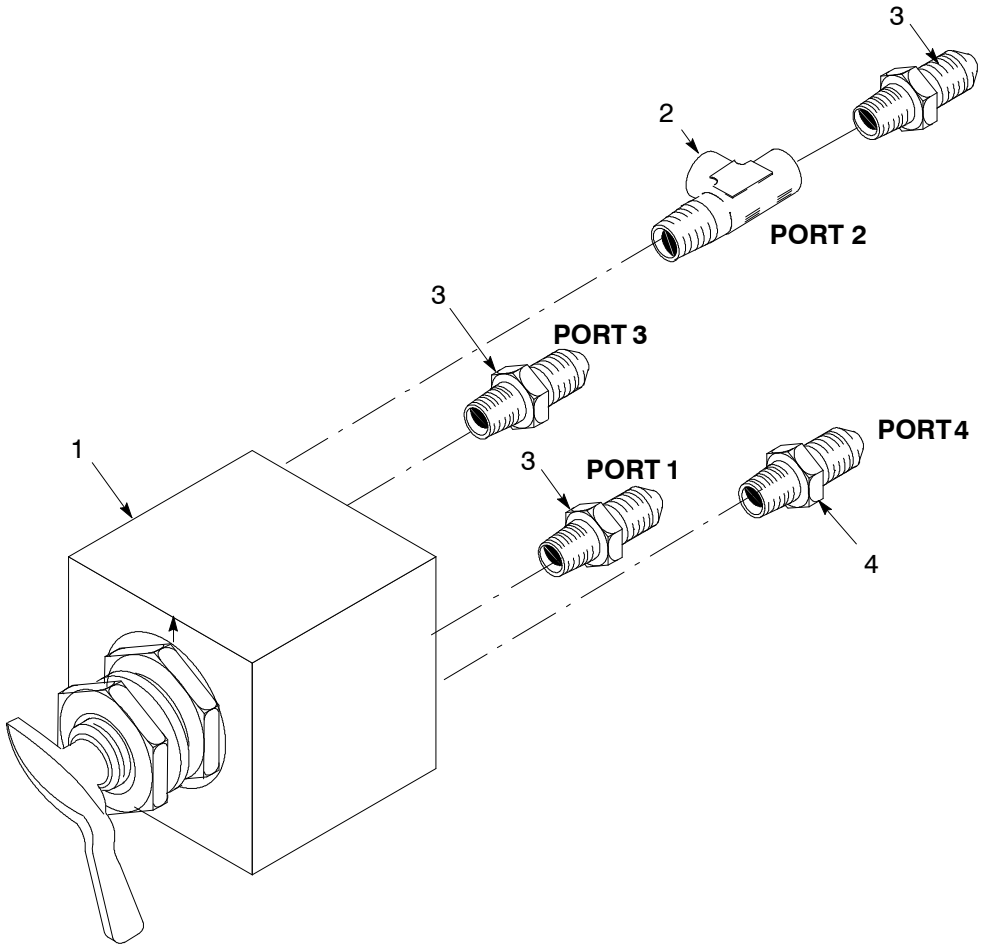

Figure 155 :VALVE ASSEMBLY *
B57169997 REV 002

57169997 VALVE ASSEMBLY *

REF.	PART NO.	QTY.	UNIT	DESCRIPTION
001	57169989	1	EA	VALVE,SELECTOR– 4 WAY
002	95403580	1	EA	TEE
003	95381158	3	EA	FITTING, HYD
004	95287629	1	EA	FITTING, HYD

57116774 PIPING, JACKS

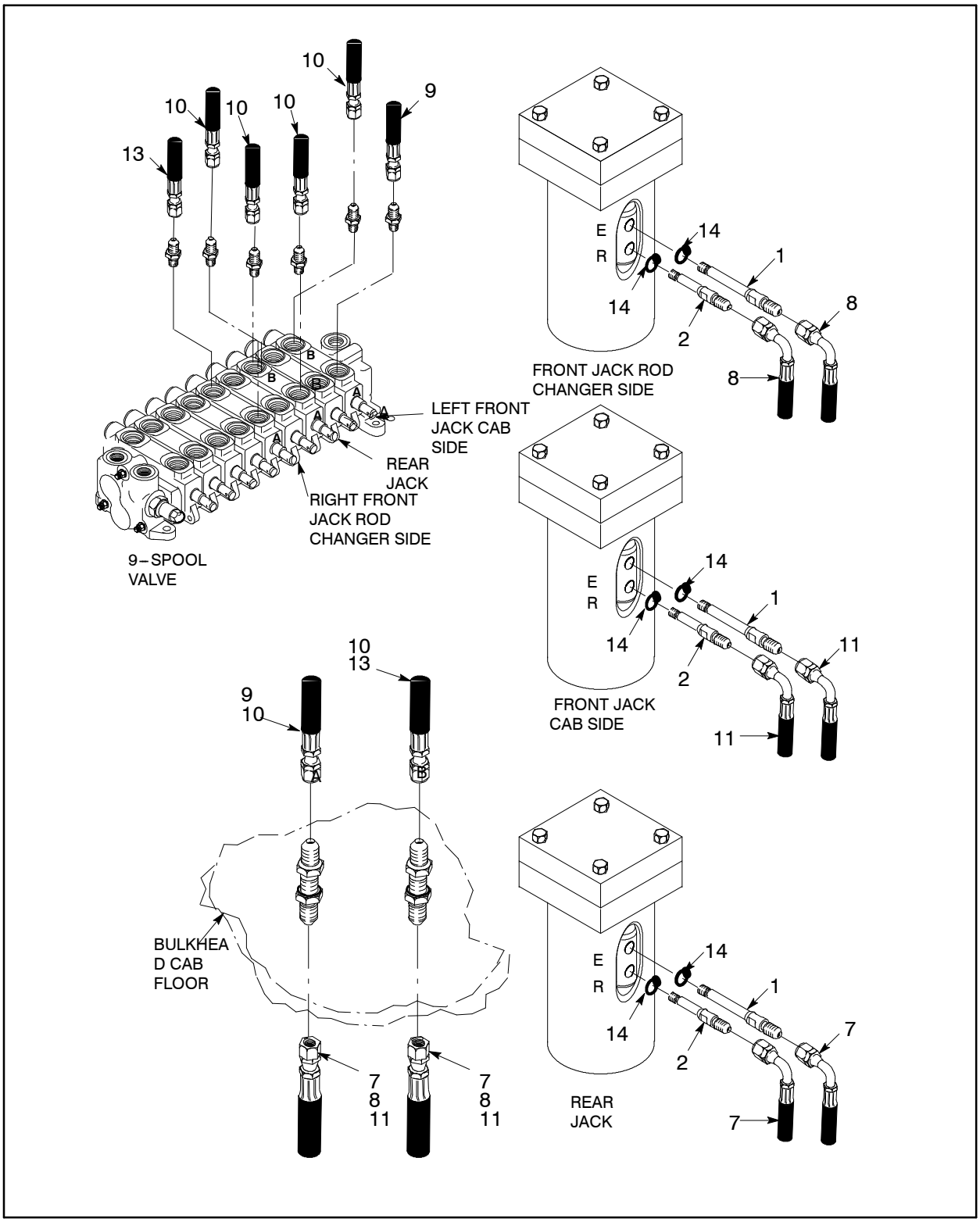

Figure 156 :PIPING, JACKS
E57116774 REV 01

WARNING: This manual contains data SPECIFIC to the drilling rig with serial number: 7341.

57116774 PIPING, JACKS

REF.	PART NO.	QTY.	UNIT	DESCRIPTION
001	57116758	3	EA	ADAPTER,GENERIC JACK–LONG
002	57116766	3	EA	ADAPTER,GENERIC JACK–SHRT
007	57229965	2	EA	HOSE ASSY
008	57330284	2	EA	HOSE ASSY
009	56961824	1	EA	HOSE ASSY
010	56961816	4	EA	HOSE ASSY
011	57311912	2	EA	HOSE ASSY
013	56992514	1	EA	HOSE ASSY
014	95209888	6	EA	O–RING, HYD

57320046 CONTROLS, OVER PRESSURE

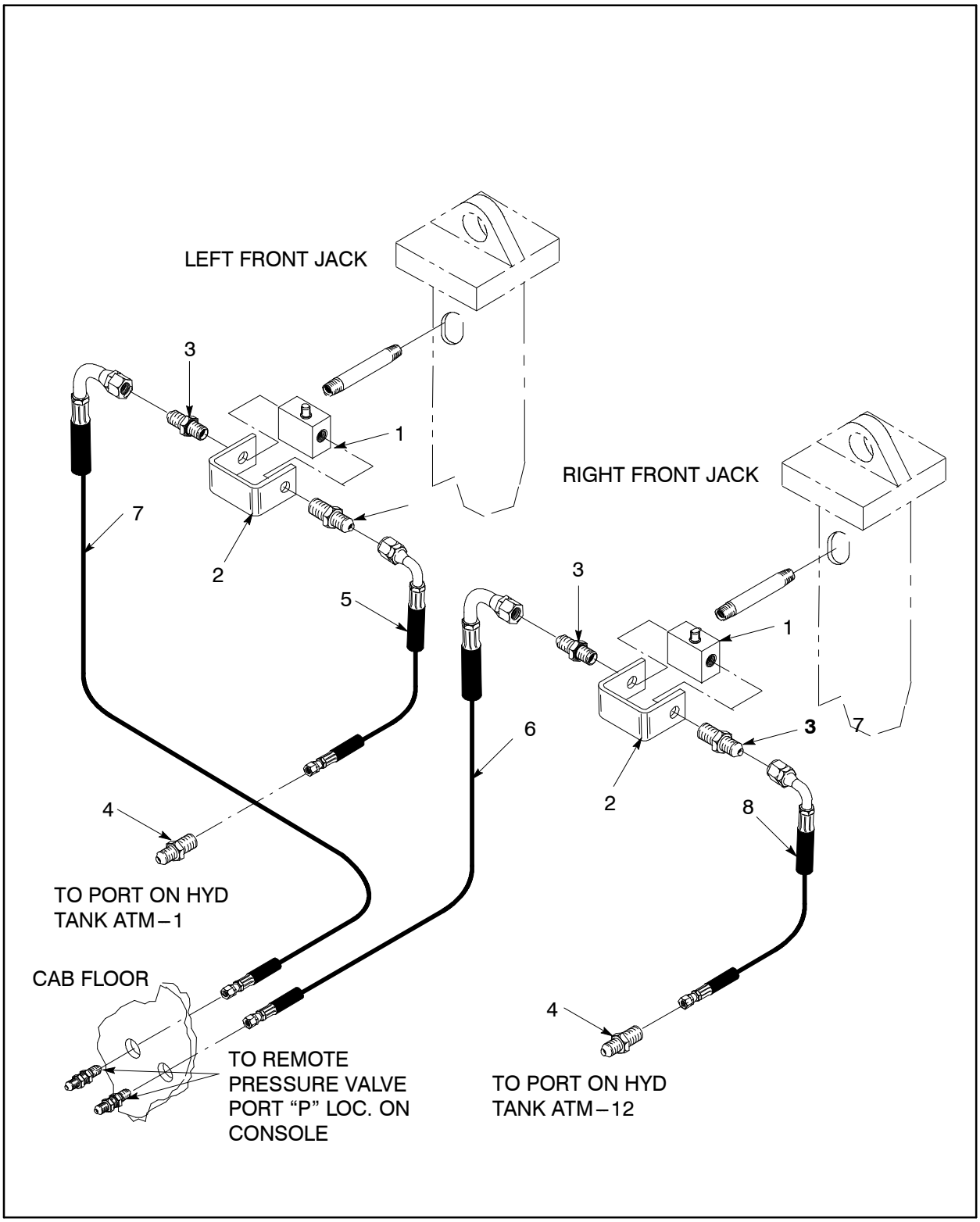

Figure 157 :CONTROLS, OVER PRESSURE
E57320046 REV 03

WARNING: This manual contains data SPECIFIC to the drilling rig with serial number: 7341.

57320046 CONTROLS, OVER PRESSURE

REF.	PART NO.	QTY.	UNIT	DESCRIPTION
001	50429356	2	EA	VALVE, 2–WAY
002	50429455	2	EA	BRACKET, VALVE
003	95365086	4	EA	FITTING HYD
004	95371258	2	EA	FITTING,HYD
005	57036618	1	EA	HOSE ASSY
006	57020802	1	EA	HOSE ASSY
007	57403685	1	EA	HOSE ASSY
008	57036618	1	EA	HOSE ASSY

57296196 CONTROL, TORQUE LIMIT

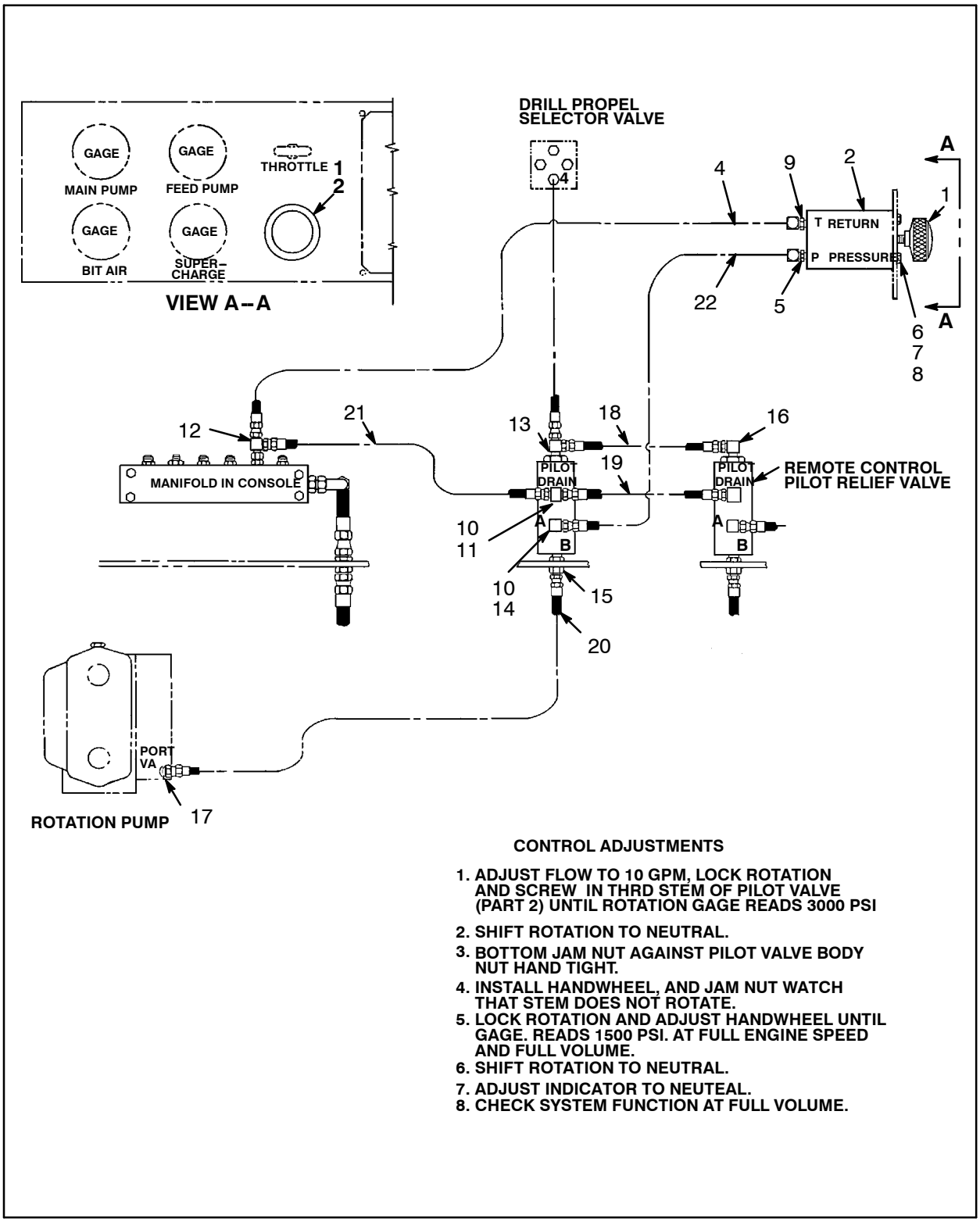

Figure 158 :CONTROL, TORQUE LIMIT
D57296196 REV00

WARNING: This manual contains data SPECIFIC to the drilling rig with serial number: 7341.

57296196 CONTROL, TORQUE LIMIT

REF.	PART NO.	QTY.	UNIT	DESCRIPTION	
001	57141905	1	EA	HANDWHEEL, INDICATING	
002	52236932	1	EA	VALVE, PRESSURE–REMOTE	*(See figure 159)*
003	57168031	1	EA	VALVE, CHECK–VENTABLE	
004	56964208	1	EA	HOSE ASSY	
005	95341665	2	EA	FITTING, HYD–90 DEG	
006	95934857	4	EA	SCREW, CAP–1/4–20 X 1–1/4	
007	95934766	4	EA	WASHER, LOCK–1/4 PLATED	
008	95931564	4	EA	NUT, HEX–1/4–20	
009	95653614	1	EA	ADAPTER–90DEG,ORING/JIC	
010	95316972	2	EA	FITTING, HYD–NPT/JIC	
011	95652178	1	EA	FITTING, HYD	
012	95415667	1	EA	FITTING, HYD	
013	95419073	1	EA	TEE NPT/JIC	
014	95302113	1	EA	FITTING, HYD	
015	52262631	1	EA	FITTING, HYD	
016	95293403	1	EA	FITTING, HYD	
017	95329967	1	EA	ADAPTER,45DEG–ORING/JIC	
018	58170465	1	EA	HOSE ASSY	
019	56961766	1	EA	HOSE ASSY	
020	58205261	1	EA	HOSE ASSY	
021	56955974	1	EA	HOSE ASSY	
022	52226453	1	EA	HOSE ASSY	

52236932 VALVE, PRESSURE – REMOTE

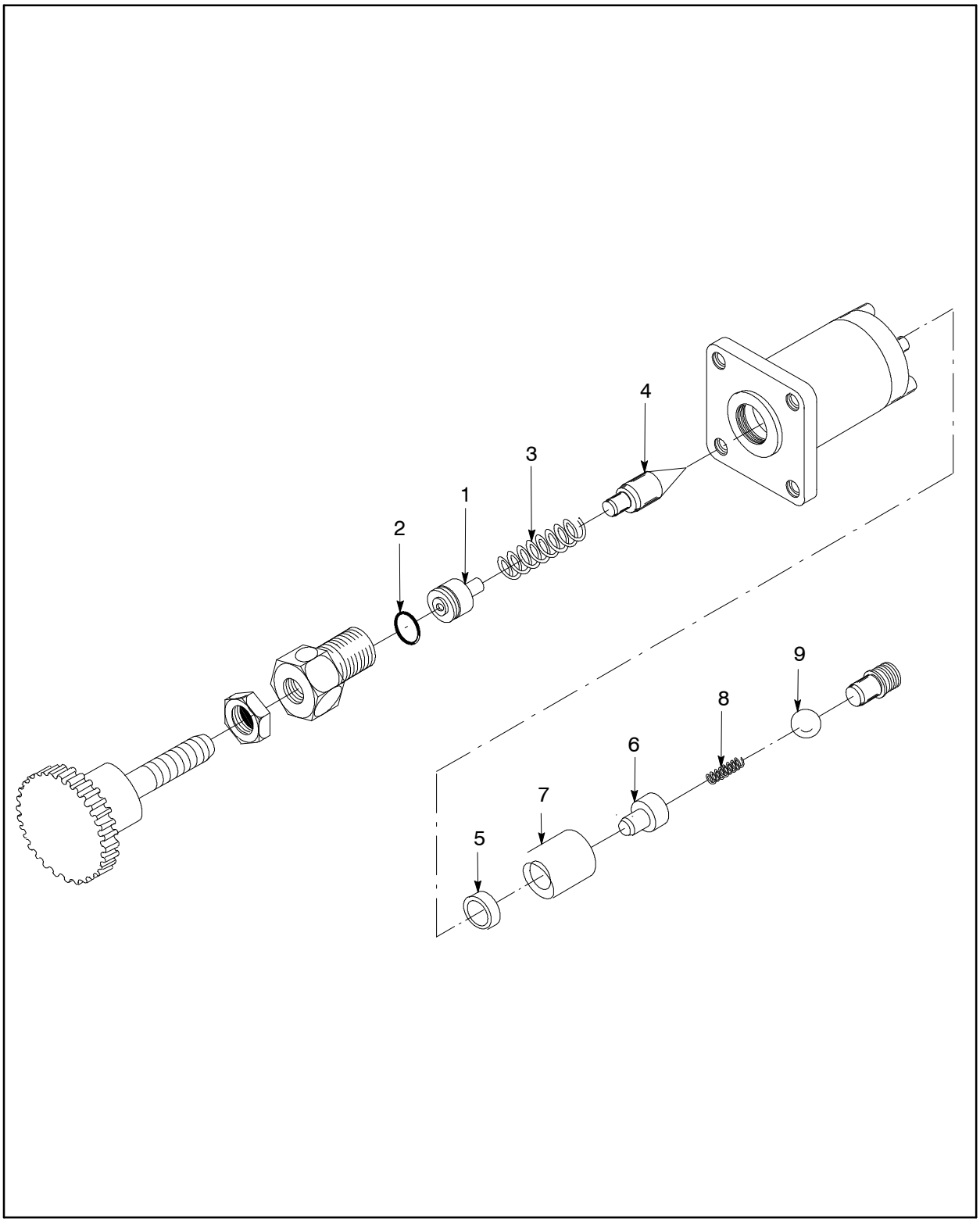

Figure 159 :VALVE, PRESSURE – REMOTE
X357724 REV00

52236932 VALVE, PRESSURE–REMOTE

REF.	PART NO.	QTY.	UNIT	DESCRIPTION
001	50798933	1	EA	SEAL,PISTON
002	95017984	1	EA	O–RING
003	50798925	1	EA	SPRING
004	50798909	1	EA	CONE
005	50798891	1	EA	SEAT
006	52249604	1	EA	PISTON
007	52249620	1	EA	SLEEVE
008	52249638	1	EA	SPRING
009	52249646	1	EA	BALL

CONTROL, TORQUE LIMIT TP: 57296196

57474751 PIPING, FAN/HOC–54" FAN

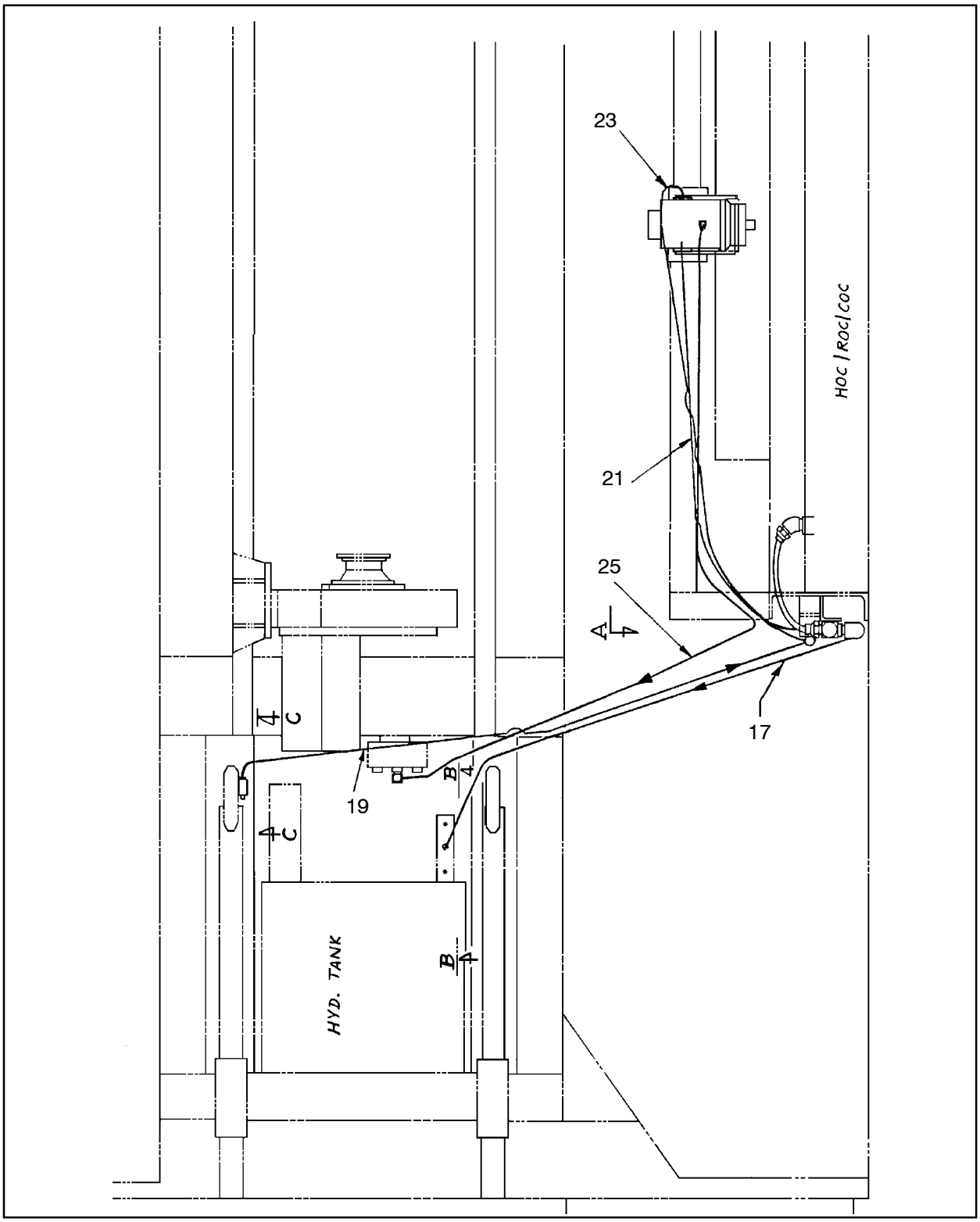

Figure 160 :PIPING, FAN/HOC–54" FAN
D57474751 REV 03

WARNING: This manual contains data SPECIFIC to the drilling rig with serial number: 7341.

57474751 PIPING, FAN/HOC – 54" FAN

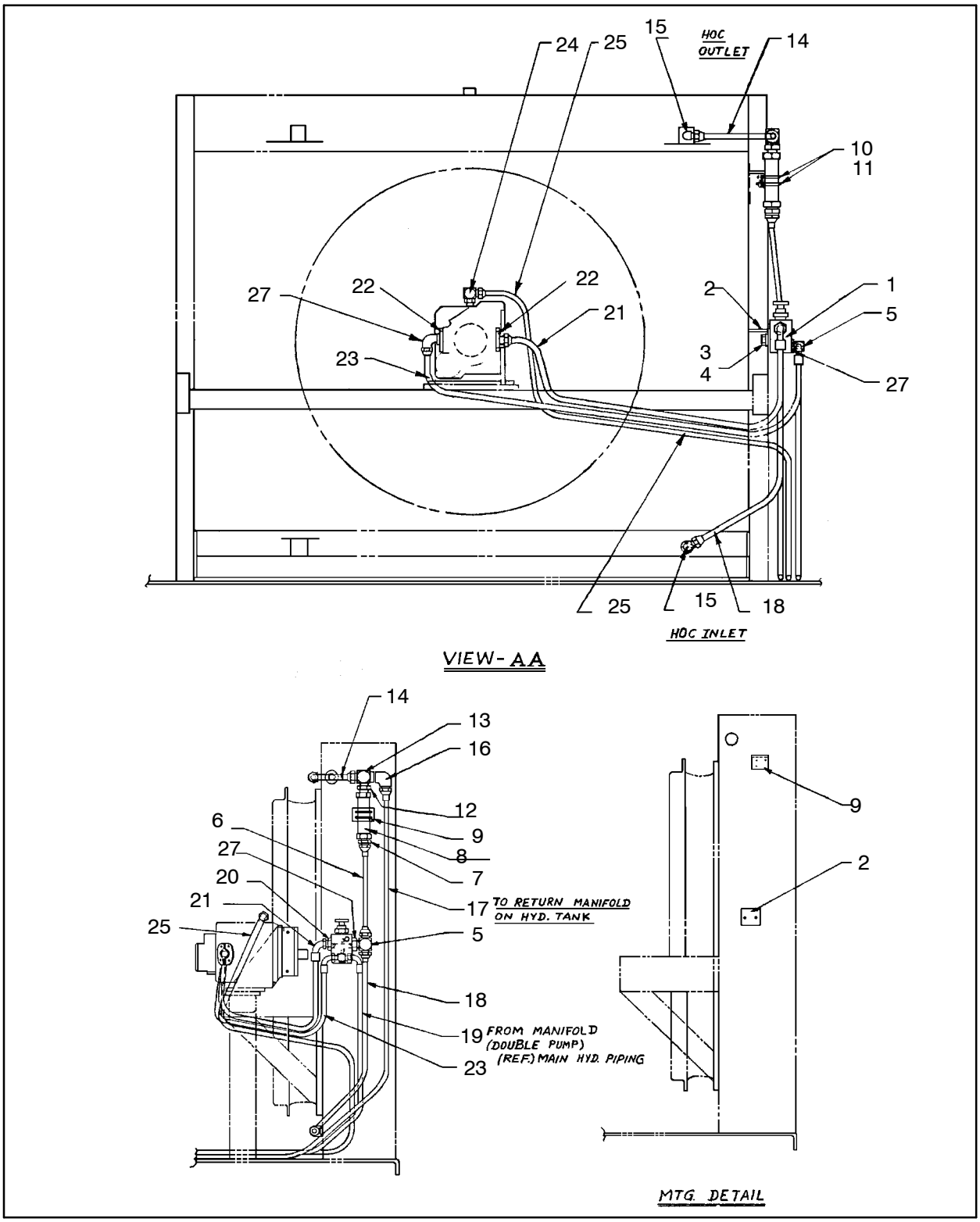

Figure 161 :PIPING, FAN/HOC – 54" FAN
D57474751 REV 03

57474751 PIPING, FAN/HOC–54" FAN

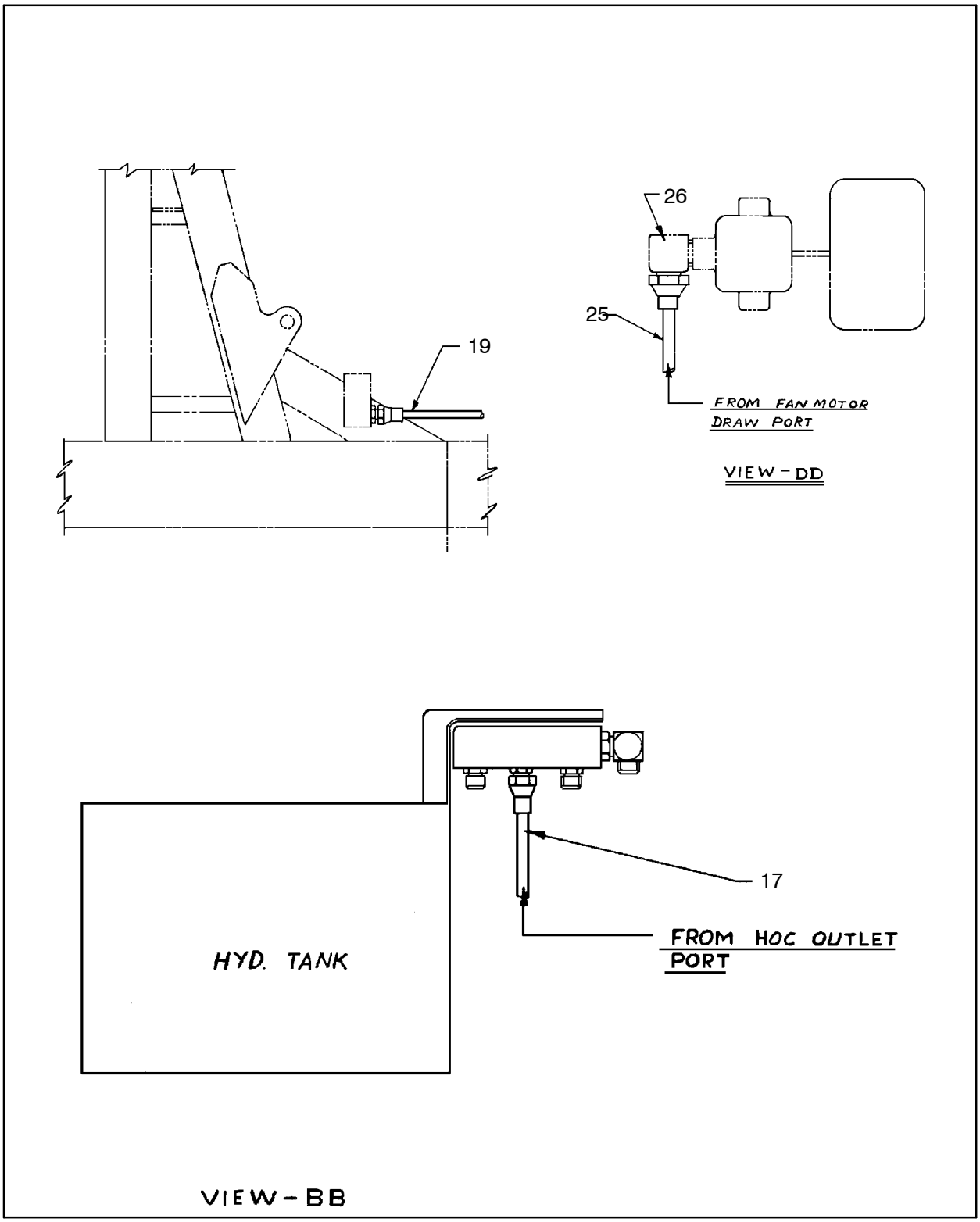

Figure 162 :PIPING, FAN/HOC–54" FAN
D57474751 REV 03

WARNING: This manual contains data SPECIFIC to the drilling rig with serial number: 7341.

57474751 PIPING, FAN/HOC–54" FAN

REF.	PART NO.	QTY.	UNIT	DESCRIPTION
001	57142515	1	EA	VALVE, RELIEF–VENTED
002	57499196	1	EA	ANGLE
003	95103743	2	EA	SUB 95934550–CAPSCREW,HEX
004	95937413	2	EA	WASHER, LOCK–3/8 PLATED
005	57482580	2	EA	TEE–JIC RUN/ORING
006	56947674	1	EA	HOSE ASSY
007	95316956	1	EA	FITTING, HYD
008	50261825	1	EA	VALVE, CHECK
009	57481483	1	EA	ANGLE, MOUNTING–CHECK VLV
010	95381828	2	EA	U–BOLT
011	95922894	4	EA	NUT, HEX–3/8–16
012	95479861	1	EA	FITTING–STR EXT NPT
013	95280095	1	EA	FITTING–TEE, INT NPT
014	57498818	1	AS	HOSE ASSY
015	95280160	1	EA	FITTING,HYD
016	95279410	1	EA	FITTING HYD
017	52225596	1	EA	HOSE ASSY
018	56984834	1	EA	HOSE ASSY
019	57525347	1	EA	HOSE ASSY
020	95371217	1	EA	FITTING
021	57498834	1	EA	HOSE ASSY
022	56883572	2	EA	KIT, SPLIT FLANGE
023	57498826	1	EA	HOSE ASSY
024	95376141	1	EA	ADAPTER–90DEG,ORING/JIC
025	57464760	1	EA	HOSE ASSY
026	95330692	1	EA	ADAPTER–90DEG,ORING/JIC
028	95343596	2	EA	PLUG, WITH O–RING
030	95219762	1	EA	FITTING, HYD
032	95280194	1	EA	FITTING, HYD–90 JIC/ORING

57523474 PIPING, TOWER – 25 FT

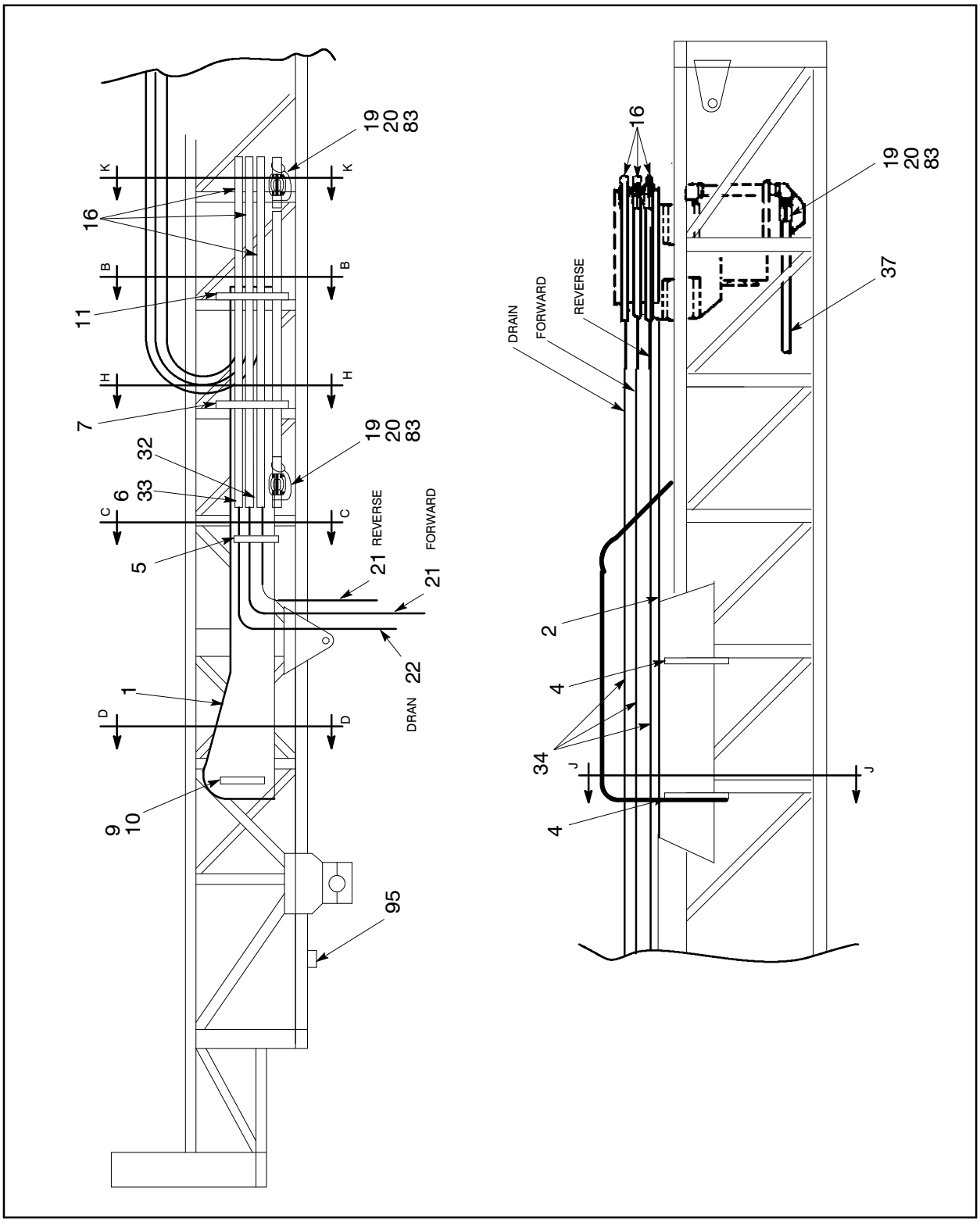

Figure 163 :PIPING, TOWER – 25 FT
E57523474 REV 00

WARNING: This manual contains data SPECIFIC to the drilling rig with serial number: 7341.

57523474 PIPING, TOWER – 25 FT

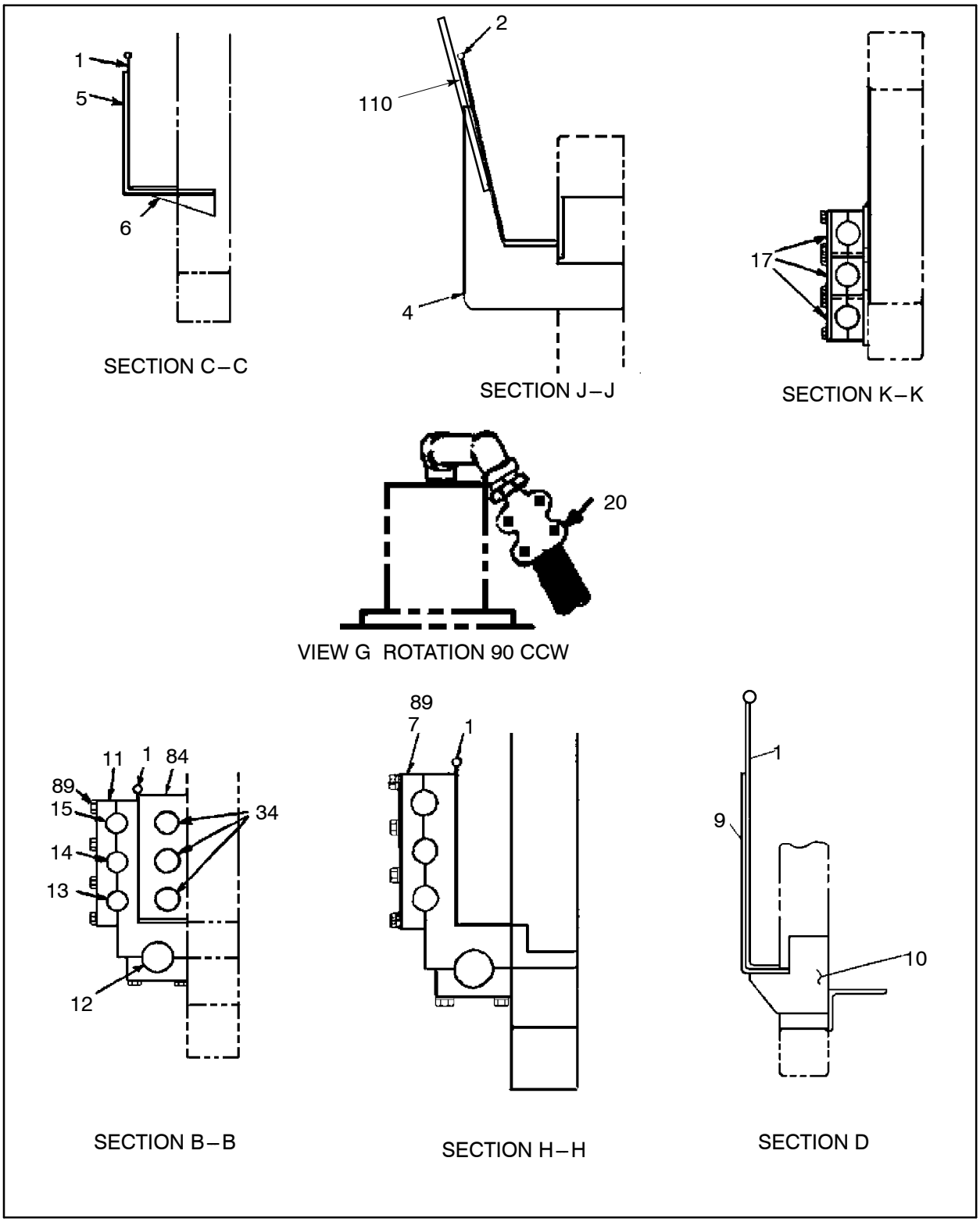

Figure 164 :PIPING, TOWER – 25 FT
E57523474 REV 00

57523474 PIPING, TOWER – 25 FT

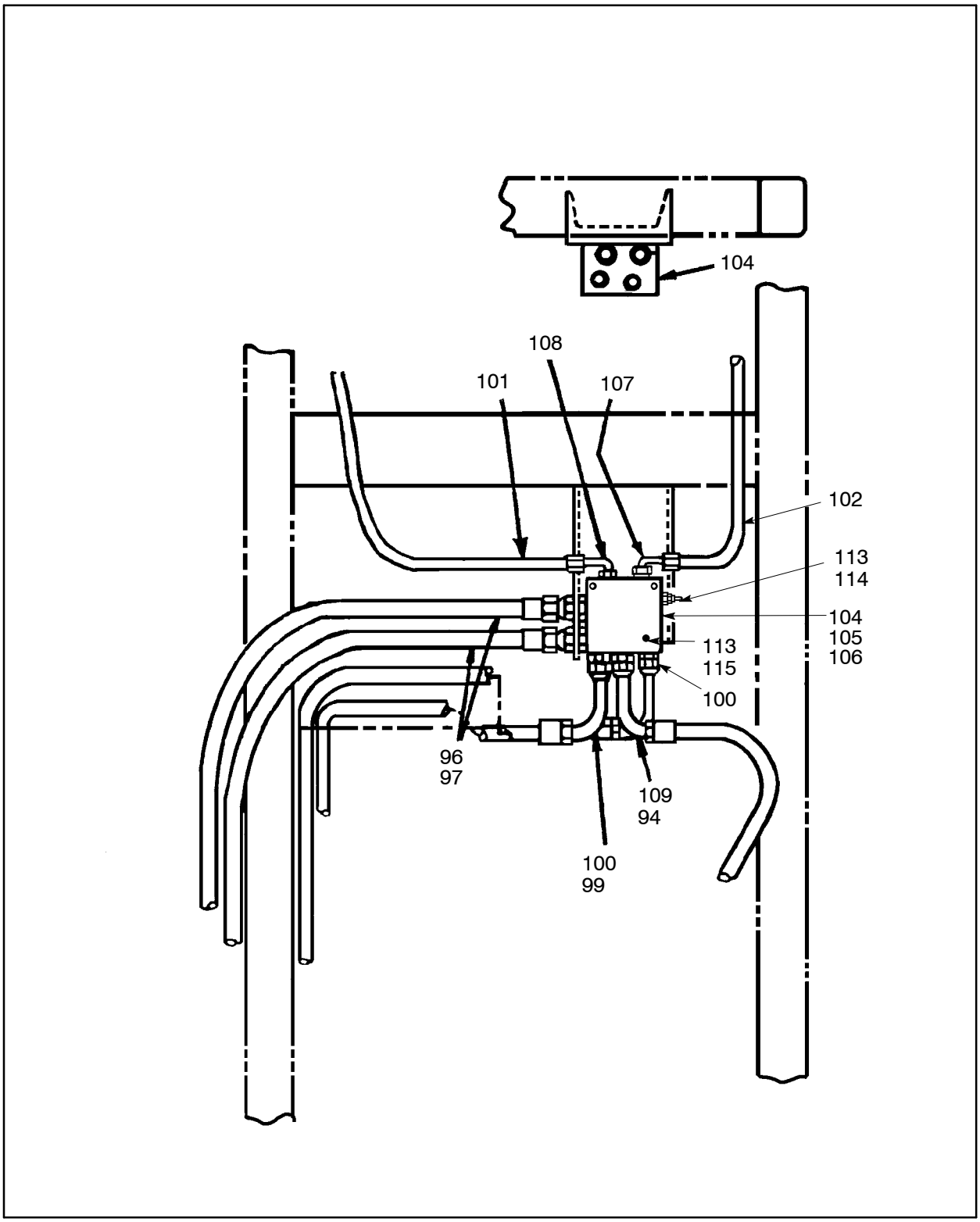

Figure 165 :PIPING, TOWER – 25 FT
E57523474 REV 00

WARNING: This manual contains data SPECIFIC to the drilling rig with serial number: 7341.

57523474 PIPING, TOWER−25 FT

REF.	PART NO.	QTY.	UNIT	DESCRIPTION
001	57083016	1	EA	HOSE TRAY
002	57083008	1	EA	HOSE TRAY
004	57390049	3	EA	GUSSET
005	57390171	1	EA	BRACKET − HOSE TRAY
006	57083172	1	EA	GUSSET
007	57390254	1	EA	CLAMP, STANDPIPE − TOWER
009	57315657	1	EA	BRACKET
010	57390262	1	EA	BRACKET, HOSE TRAY
011	57390270	1	EA	CLAMP,STANDPIPE−TOWER
012	57082554	1	EA	STANDPIPE
013	57085573	1	EA	STANDPIPE
014	57424806	1	EA	STANDPIPE
015	57085599	1	EA	STANDPIPE
016	56783020	8	EA	KIT, SPLIT FLANGE
017	57092728	3	EA	CLAMP ASSY, 1−1/4 PIPE
019	50023910	2	EA	STEM
020	50743731	3	EA	CLAMP, HOSE
021	V20X000A−−/F−−	2	AS	HOSE INDICATOR, FC254−20
022	F12X000J−−/J−−	1	EA	FC310−12 HOSE INDICATOR
032	50347889	1	EA	VALVE, CHECK
033	95219747	1	EA	FITTING, HYD
034	56992357	3	EA	HOSE ASSY
037	95433330	1	EA	HOSE,AIR
083	56933732	2	EA	CABLE, WHIP CHECK
084	57093197	1	EA	BAR, ROUND
089	56893217	8.00	FT	WIRE
094	H16X000A−−/A90	1	EA	HOSE INDICATOR
095	95301883	2	EA	CLAMP, HOSE
096	57167454	2	EA	FITTING,STR,20OFS X 20SAE
097	V20X000A−−/A45	2	EA	HOSE INDICATOR
098	H16X000A−−/A90	1	EA	HOSE INDICATOR
099	H16X000A−−/A90	1	EA	HOSE INDICATOR
100	57319683	3	EA	FITTING,STR,16OFS X 16SAE
101	H12X000A−−/A−−	1	EA	HOSE INDICATOR
102	H12X000A−−/A−−	1	EA	HOSE INDICATOR
107	57319675	1	EA	FITTING,STR,12OFS X 16SAE
108	57308850	1	EA	FITTING,L45,12OFS X 16SAE

57523474 PIPING, TOWER – 25 FT

REF.	PART NO.	QTY.	UNIT	DESCRIPTION
109	57329989	1	EA	PLATE SPACER, VALVE
110	57503815	1	EA	EXTENSION,HOSE TRAY – 30FT
113	57328676	2	EA	FITTING, TEST
114	95650156	1	EA	ADAPTER
115	52209913	1	EA	ADAPTER, SAE

WARNING: This manual contains data SPECIFIC to the drilling rig with serial number: 7341.

57523474 PIPING, TOWER – 25 FT

This page is blank.

57448219 CONTROL, HOLDBACK SYSTEM

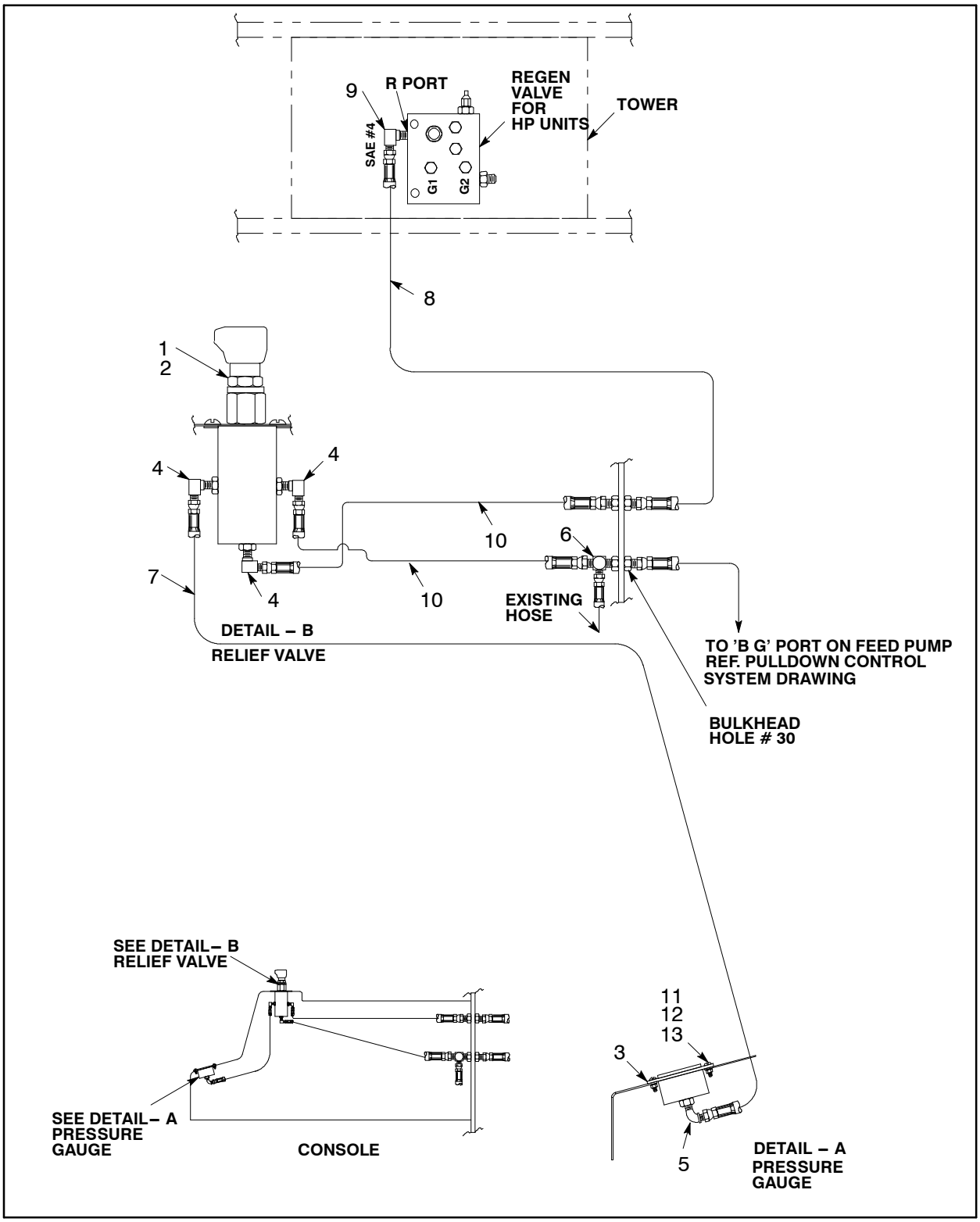

Figure 166 :CONTROL, HOLDBACK SYSTEM
D57448219 REV 01

WARNING: This manual contains data SPECIFIC to the drilling rig with serial number: 7341.

57448219 CONTROL, HOLDBACK SYSTEM

REF.	PART NO.	QTY.	UNIT	DESCRIPTION
001	57216699	1	EA	VLV,RELIEF FEED/TORQUE
002	95079406	2	EA	SCREW
003	56930688	1	EA	GAUGE, PRESSURE–0–5000PSI
004	95365094	3	EA	ADAPTER–90DEG,ORING/JIC
005	95293353	1	EA	ADAPTER
006	95473443	1	EA	FITTING HYD
007	57044737	1	EA	HOSE ASSY
008	57020711	1	EA	HOSE ASSY
009	95365086	1	EA	FITTING HYD
010	56965759	2	EA	HOSE ASSY
011	95410627	3	EA	SCREW,MACHINE–6–32 X 3/4
012	95037149	3	EA	WASHER,LOCK–NO. 6
013	95076717	3	EA	NUT,HEX MACHINE–NO.6–32

57431942 PIPING, GEAR INDEXER

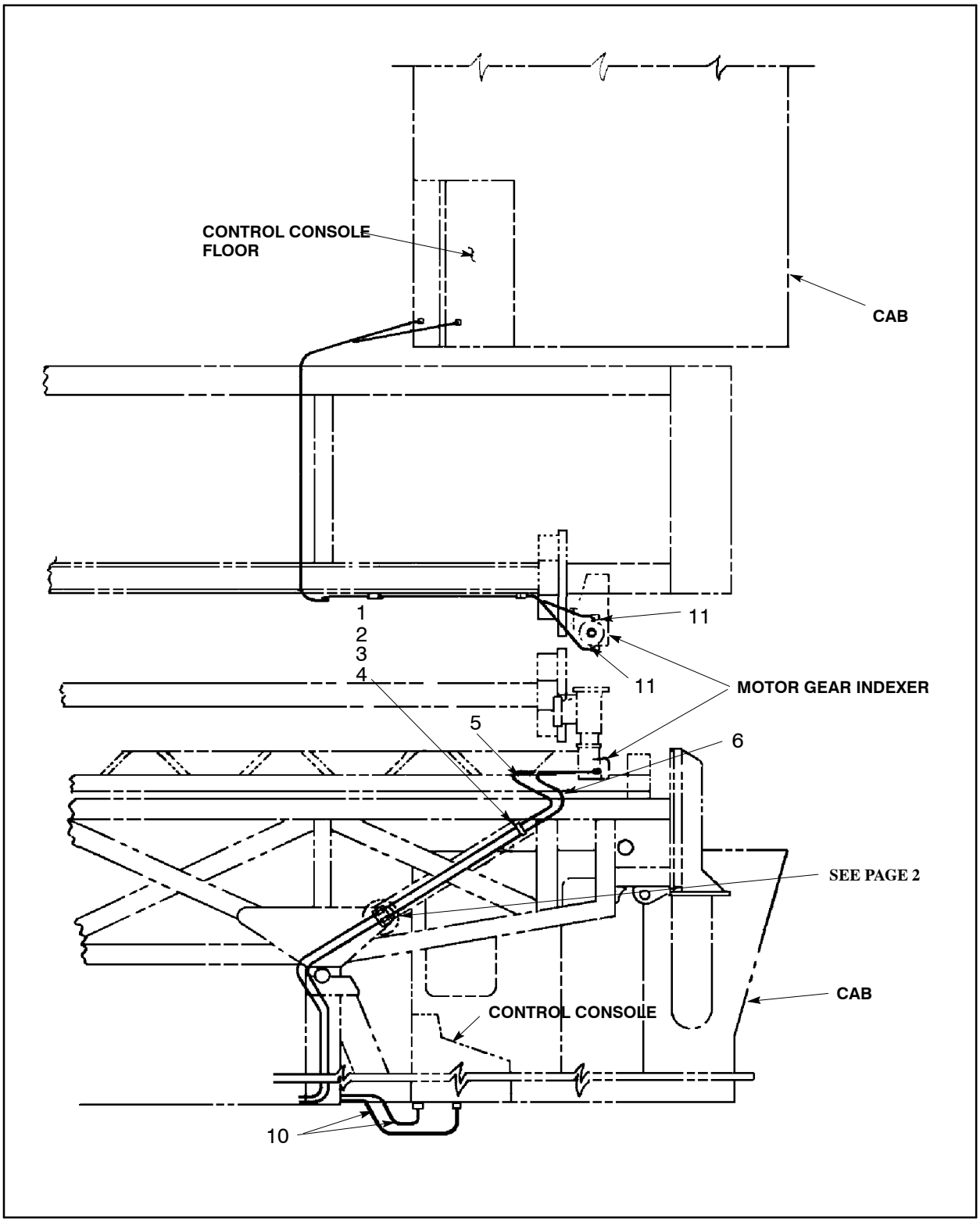

Figure 167 :PIPING, GEAR INDEXER
C57345217 REV 02

WARNING: This manual contains data SPECIFIC to the drilling rig with serial number: 7341.

57431942 PIPING, GEAR INDEXER

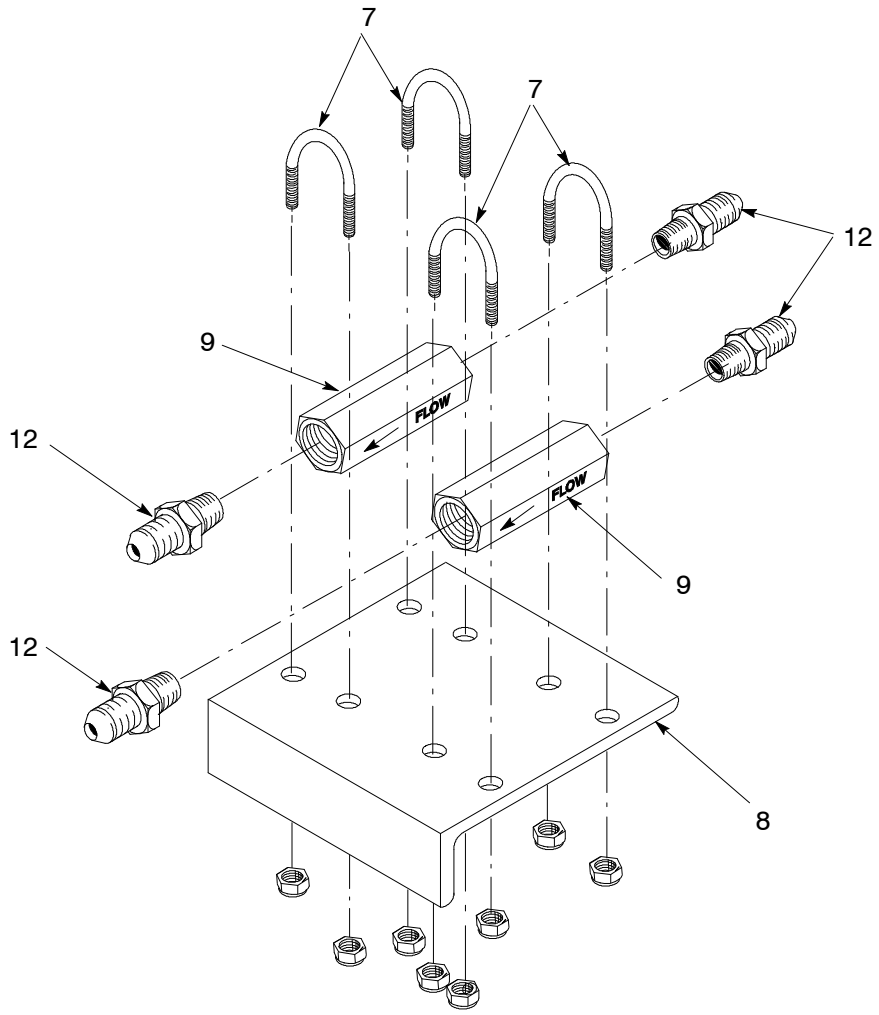

Figure 168 :PIPING, GEAR INDEXER
C57345217 REV 02

57431942 PIPING, GEAR INDEXER

REF.	PART NO.	QTY.	UNIT	DESCRIPTION
001	50034826	1	EA	CLAMP, HOSE
002	95931564	1	EA	NUT, HEX 1/4–20
003	95934766	1	EA	LOCKWASHER–1/4 PLATED
004	95105466	1	EA	SCREW,CAP–HEX,1/4–20 X1.5
005	56955628	1	EA	HOSE ASSY
006	56956147	1	EA	HOSE ASSY
007	52263035	4	EA	U–BOLT
008	57332744	1	EA	BRACKET,FLOW CNTL VALVE
009	57290397	2	EA	VALVE, RESTTRICTOR
010	57328973	2	EA	HOSE ASSY
011	95303335	2	EA	FITTING,HYD
012	95219721	4	EA	FITTING,HYD
013	56949449	2	EA	HOSE ASSY

WARNING: This manual contains data SPECIFIC to the drilling rig with serial number: 7341.

57431942 PIPING, GEAR INDEXER

This page is blank.

57229445 CONTROLS, PULLDOWN SYSTEM

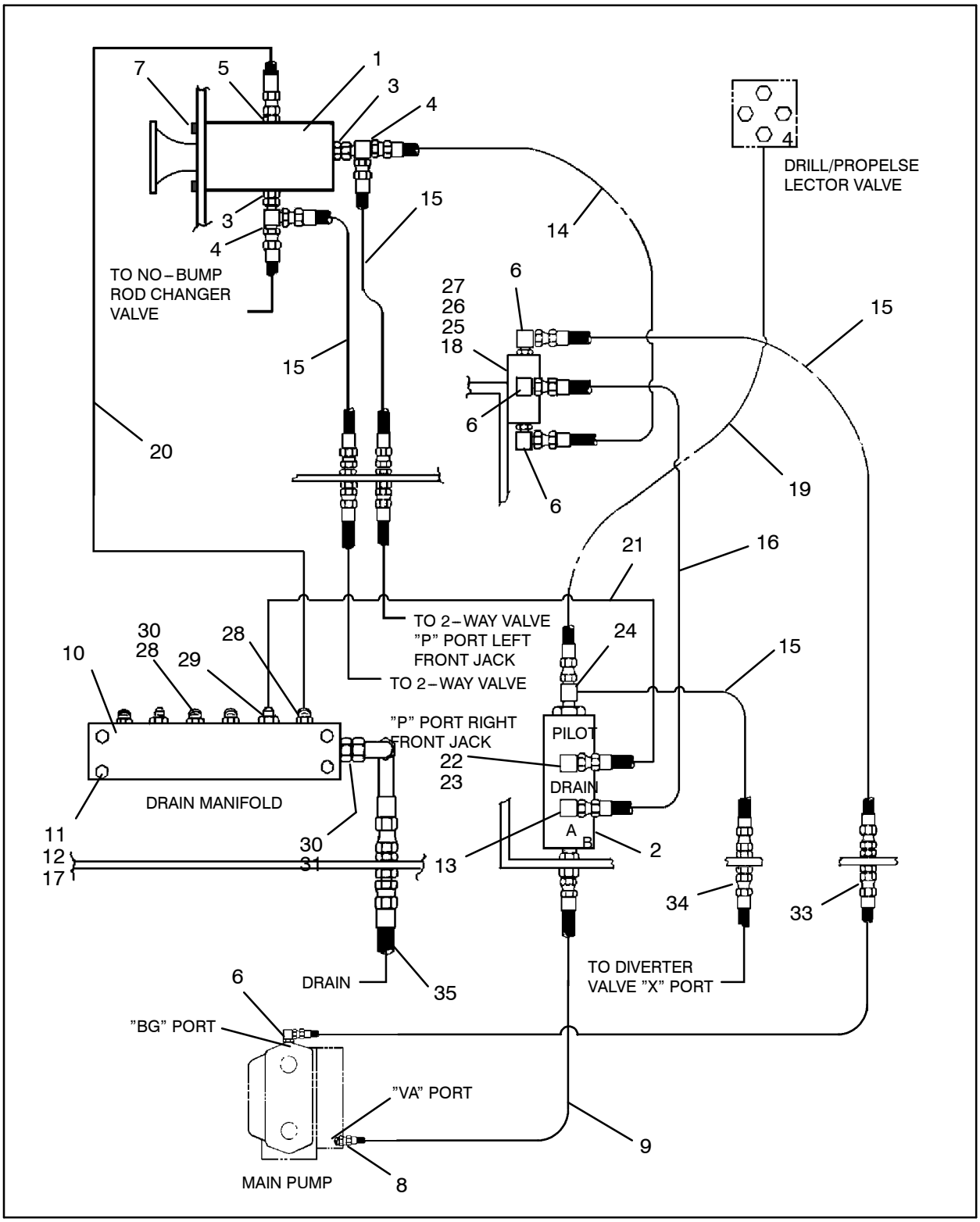

Figure 169 :CONTROLS, PULLDOWN SYSTEM
D57229445 REV 05

WARNING: This manual contains data SPECIFIC to the drilling rig with serial number: 7341.

57229445 CONTROLS, PULLDOWN SYSTEM

REF.	PART NO.	QTY.	UNIT	DESCRIPTION
001	57216699	1	EA	VALVE,RELIEF FEED/TORQUE
002	57168031	1	EA	VALVE,CHECK
004	95862371	1	EA	FITTING,HYD
006	95365094	5	EA	ADAPTER-90DEG,ORING/JIC
007	95079406	2	EA	SCREW
008	95329967	1	EA	ADAPTER,45DEG-ORING/JIC
009	52226461	1	EA	HOSE ASSY
010	56932965	1	EA	MANIFOLD
011	95934766	4	EA	LOCKWASHER-1/4 PLATED
012	95931564	4	EA	NUT, HEX 1/4-20
013	95302238	1	EA	ELBOW 106A23
014	57004004	1	EA	HOSE ASSY
015	56965759	4	EA	HOSE ASSY
016	56992050	1	EA	HOSE ASSY
017	95958369	4	EA	SCREW,CAP-1/4-20 X 2-3/4
018	95094298	2	EA	WASHER, FLAT, 1/4
019	57100281	1	EA	HOSE ASSY
020	56949407	1	EA	HOSE ASSY
021	56971930	1	EA	HOSE ASSY
023	95209094	1	EA	FITTING,HYD
024	95419073	1	EA	TEE NPT/JIC
025	56986656	1	EA	VALVE, CHECK
026	95922894	2	EA	NUT, HEX-3/8-16
027	95103818	2	EA	SCREW,CAP-HEX,3/8-16 X 2
028	95279089	2	EA	ELBOW
031	95219747	1	EA	FITTING,HYD
032	57277428	1	EA	HOSE
033	57020836	1	EA	HOSE ASSY
035	57330276	1	EA	HOSE ASSY
036	95302113	1	EA	FITTING HYD
037	95267191	3	EA	PLUG,PIPE-3/4 COUNTERSUNK
038	95345021	2	EA	PLUG,PIPE-3/8 COUNTERSUNK
039	95329975	1	EA	FITTING,HYD
040	95094298	4	EA	WASHER, FLAT, 1/4

57523417 PIPING, ROD CHANGER – 25FT

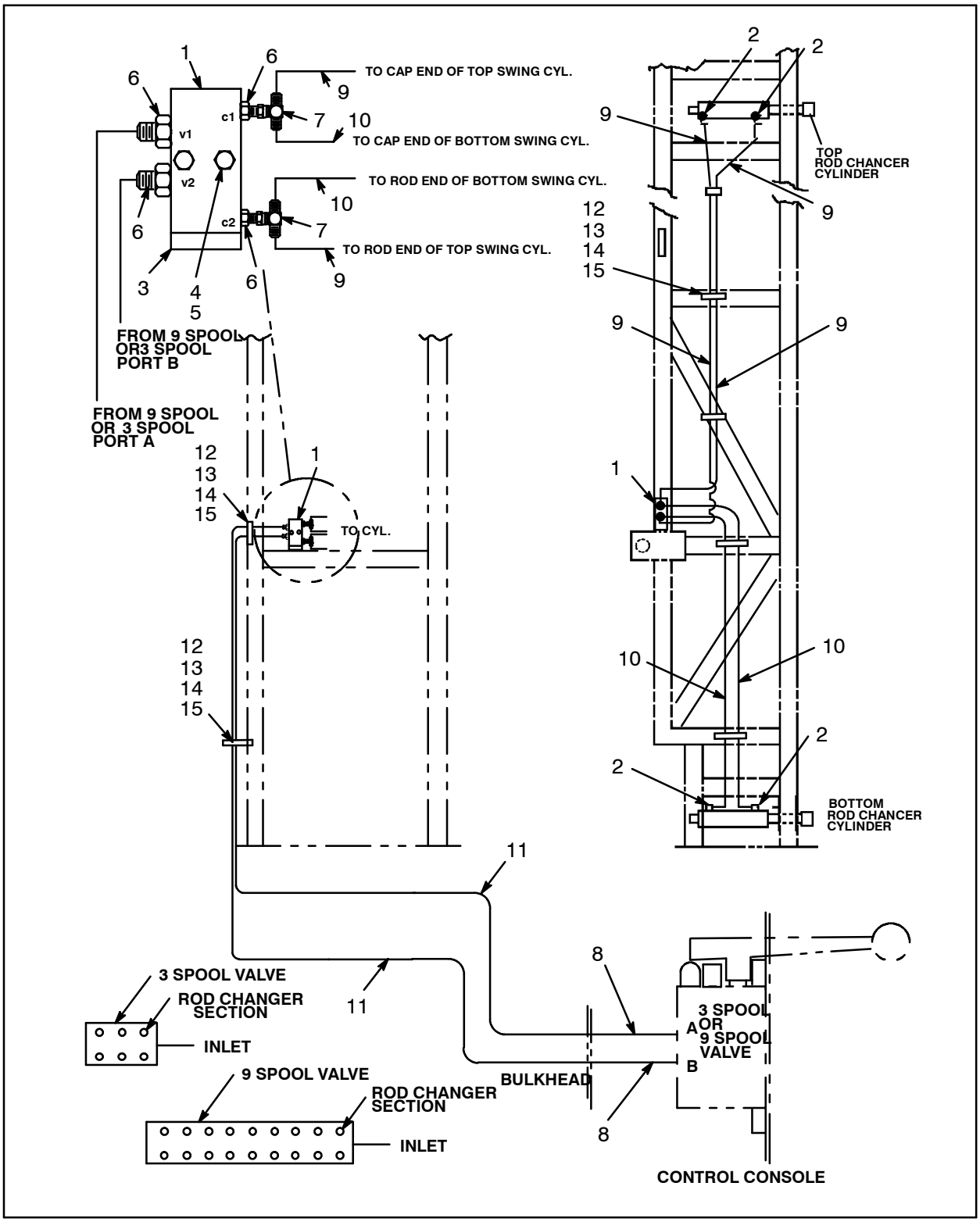

Figure 170 :PIPING, ROD CHANGER – 25FT
E57406894 REV 002

WARNING: This manual contains data SPECIFIC to the drilling rig with serial number: 7341.

57523417 PIPING, ROD CHANGER–25FT

REF.	PART NO.	QTY.	UNIT	DESCRIPTION
001	50462944	1	EA	VALVE, CHECK–DBL PILOT OP
002	95356903	4	EA	FITTING, HYD
003	57054991	1	EA	BAR, TAPPED
004	95044038	2	EA	SUB 95943668–CAPSCREW,HEX
005	95934303	2	EA	WASHER, LOCK–5/16 PLATED
006	95329975	4	EA	FITTING, HYD
007	95652178	2	EA	FITTING, HYD
008	56961782	2	EA	HOSE ASSY
009		2	EA	HOSE
010	56971559	2	EA	HOSE ASSY
011	56966963	2	EA	HOSE ASSY
012	50034826	10	EA	CLAMP, HOSE
013	95105466	5	EA	SUB 95920724–CAPSCREW,HEX
014	95934766	5	EA	WASHER, LOCK–1/4 PLATED
015	95931564	5	EA	NUT, HEX–1/4–20

57207151 PIPING, NO–BUMP ROD CHANGER

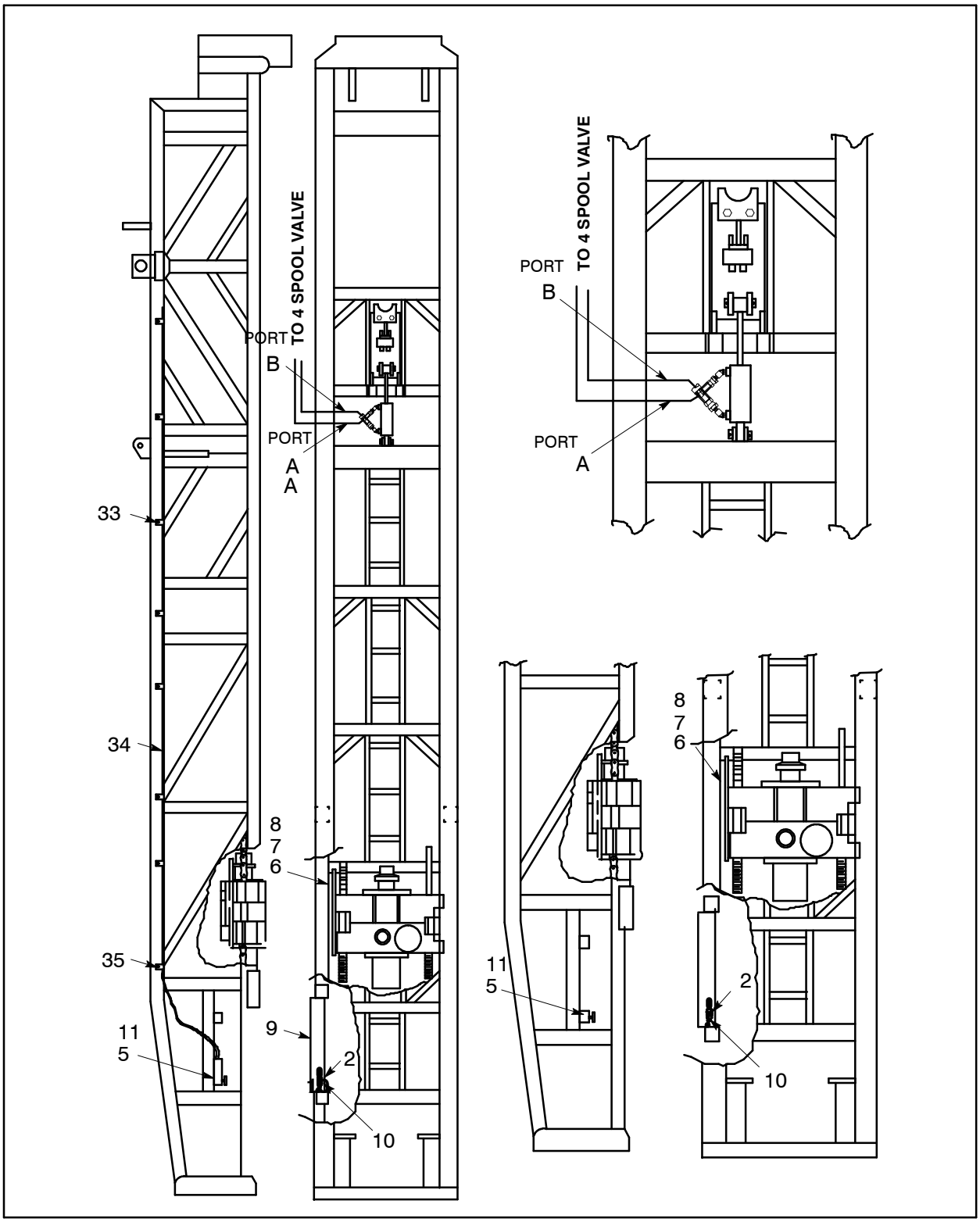

Figure 171 :PIPING, NO–BUMP ROD CHANGER
E57207151 REV 06

57207151 PIPING, NO–BUMP ROD CHANGER

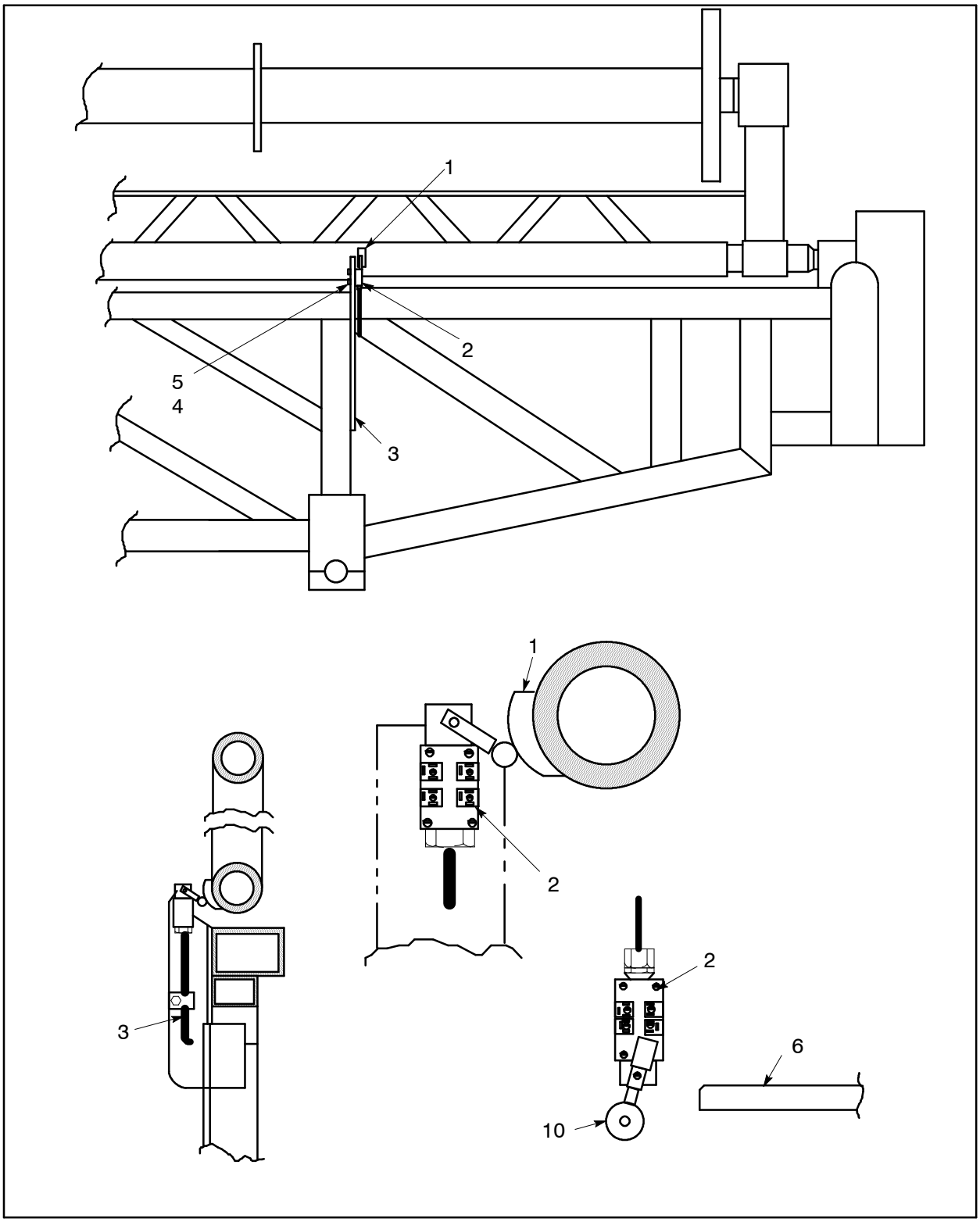

Figure 172 :PIPING, NO–BUMP ROD CHANGER
E57207151 REV 06

57207151 PIPING, NO–BUMP ROD CHANGER

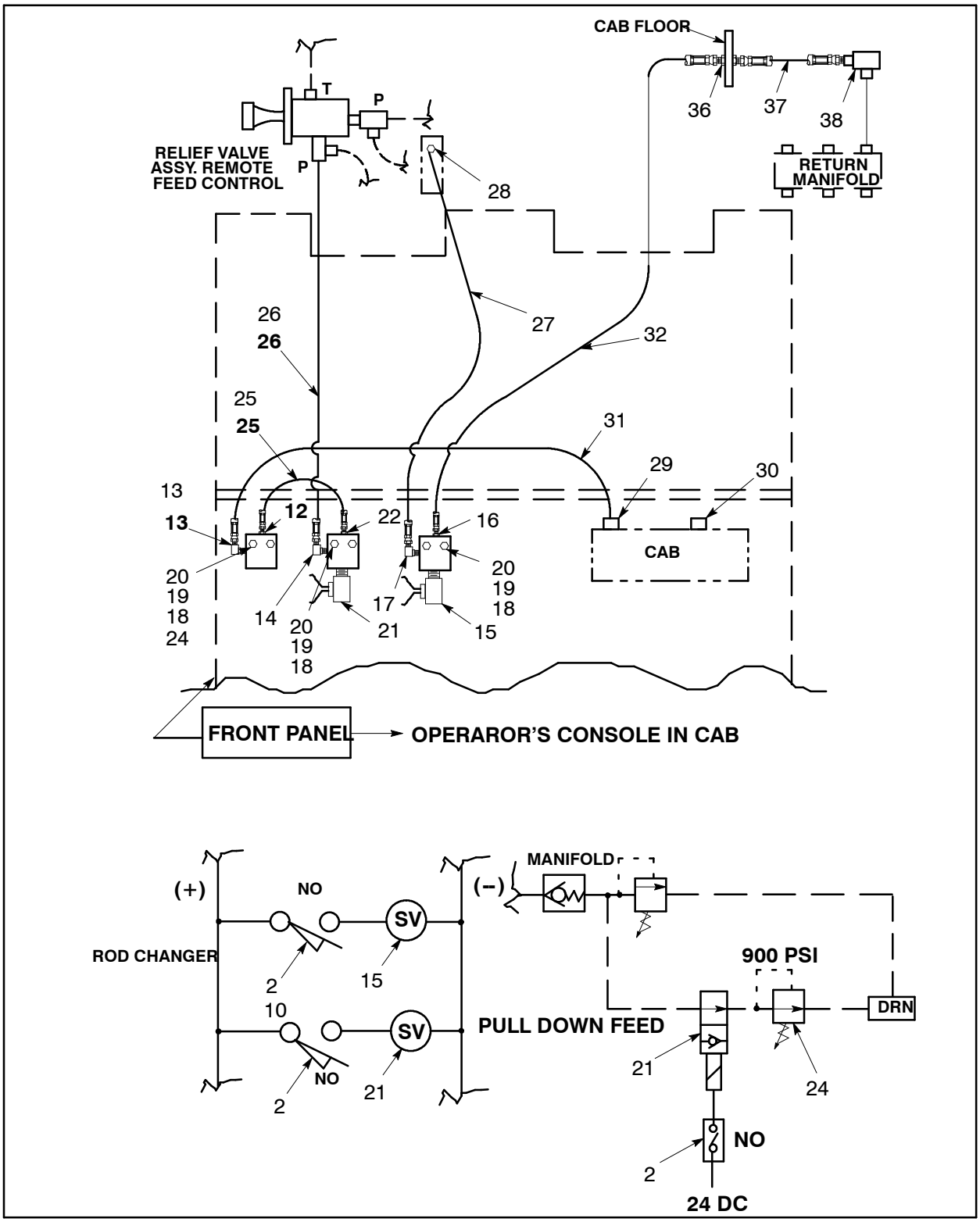

Figure 173 :PIPING, NO–BUMP ROD CHANGER
E57207151 REV 06

WARNING: This manual contains data SPECIFIC to the drilling rig with serial number: 7341.

57207151 PIPING, NO–BUMP ROD CHANGER

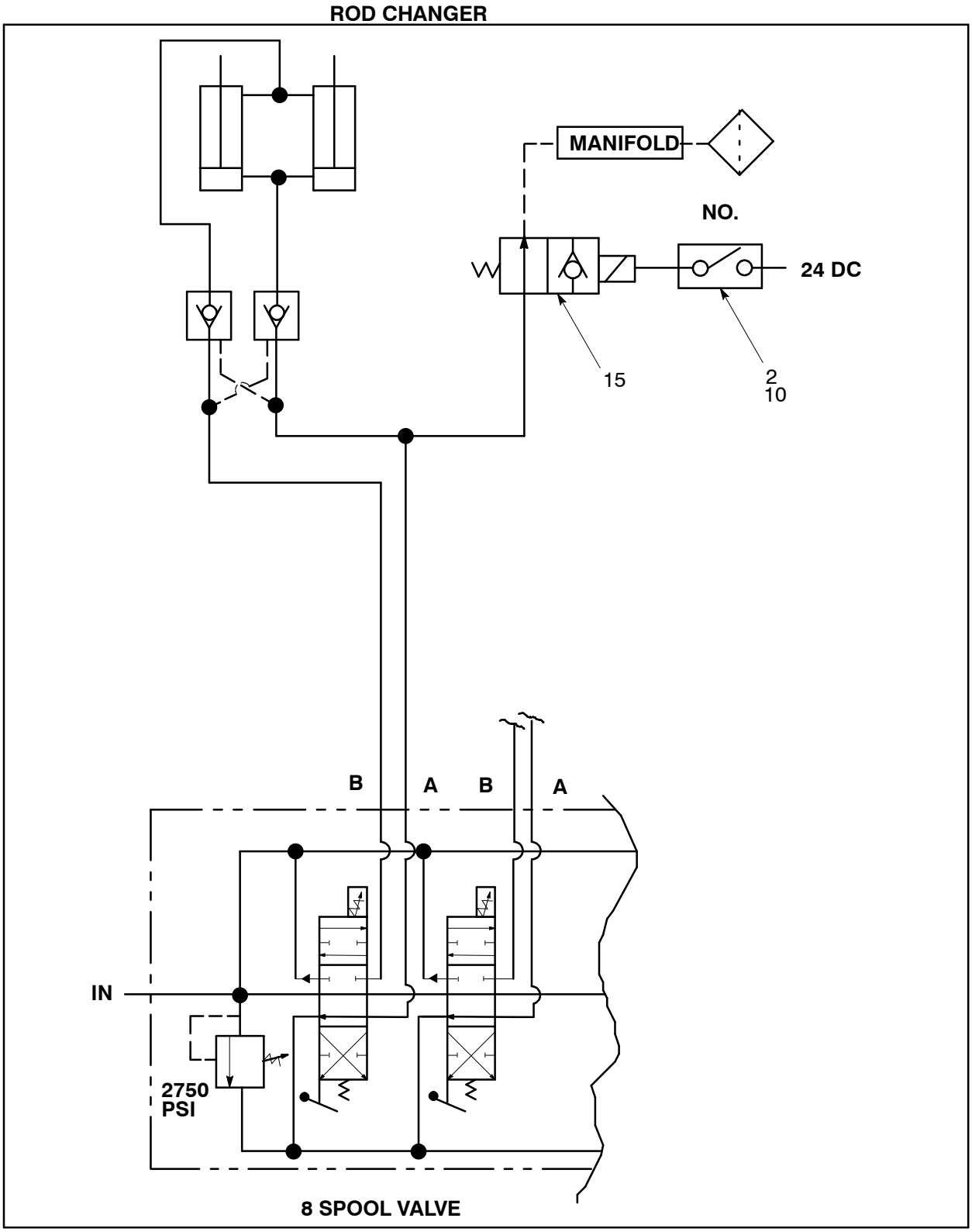

Figure 174 :PIPING, NO–BUMP ROD CHANGER
E57207151 REV 06

57207151 PIPING, NO–BUMP ROD CHANGER

REF.	PART NO.	QTY.	UNIT	DESCRIPTION
001	57205288	1	EA	BLOCK
002	50518653	2	EA	SWITCH, LIMIT
003	57205478	1	EA	PLATE, MOUNT
004	95958351	1	EA	SCREW, CAP–1/4–20 X 7/8
005	95934766	8	EA	WASHER, LOCK–1/4 PLATED
006	57206831	1	EA	PLATE, CAM
007	95035424	6	EA	SCREW, CAP–5/8UNC X 2
008	95080206	6	EA	NUT, HEX LOCK–5/8–11
009	57207169	1	EA	BRACKET
010	57194987	1	EA	ARM, ADJUSTABLE
011	95928982	4	EA	SCREW, CAP–1/4–20 X 3/4
012	95363339	1	EA	ADAPTER,45DEG–ORING/JIC
013	95329975	1	EA	FITTING, HYD
014	56999246	1	EA	FITTING, HYD
015	57194979	1	EA	VALVE, 2–WAY SOLENOID
016	95359410	1	EA	FITTING, HYD
017	95330692	1	EA	ADAPTER–90DEG,ORING/JIC
018	95971552	6	EA	SCREW, CAP HEX HEAD
019	95931564	6	EA	NUT, HEX–1/4–20
020	95934766	6	EA	WASHER, LOCK–1/4 PLATED
021	57194961	1	EA	VALVE, 2–WAY SOLENOID
	57323610	1	EA	● - VALVE, 2–WAY SOL. CART.
	57323636	1	EA	● - COIL, VALVE
	57323628	1	EA	● - BODY, VALVE
	57323636	1	EA	● - COIL, VALVE
022	95280152	1	EA	ADAPTER, 45DEG,ORING/JIC
024	57218117	1	EA	VALVE, DIRECT ACTNG RELEF
025	57002115	1	EA	HOSE ASSY
026	58146622	1	EA	HOSE ASSY
027	56961782	1	EA	HOSE ASSY
028	95416731	1	EA	NUT, SWIVEL TEE
029	95279089	1	EA	ELBOW
030	95200333	1	EA	PLUG
031	58067836	1	EA	HOSE ASSY
032	57040784	1	EA	HOSE ASSY
033	52236783	8	EA	CLAMP ASSY, 1/2”
034	95333209	360.00	FT	CONDUIT, FLEX–1/2”

WARNING: This manual contains data SPECIFIC to the drilling rig with serial number: 7341.

57207151 PIPING, NO–BUMP ROD CHANGER

REF.	PART NO.	QTY.	UNIT	DESCRIPTION
035	95301867	100	EA	CLAMP, HOSE
036	52197167	1	EA	ADAPTOR
037	56956444	1	EA	HOSE ASSY
038	95280186	1	EA	FITTING, HYD
039	56999246	1	EA	FITTING, HYD
040	56919004	1	EA	FITTING, HYD

57388803 PINNING, TOWER – INSTALL

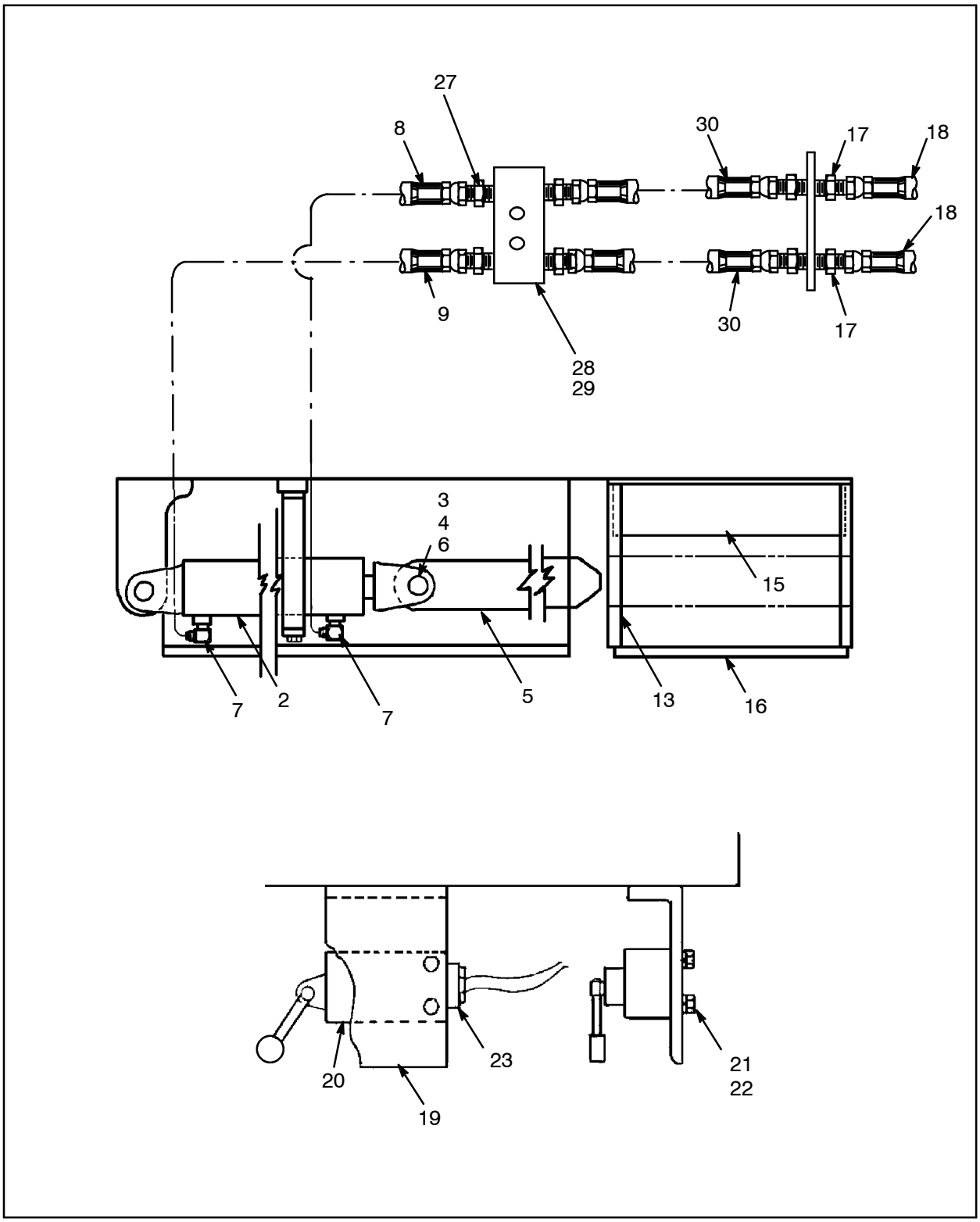

Figure 175 :PINNING, TOWER – INSTALL
D57388803 REV03

WARNING: This manual contains data SPECIFIC to the drilling rig with serial number: 7341.

57388803 PINNING, TOWER – INSTALL

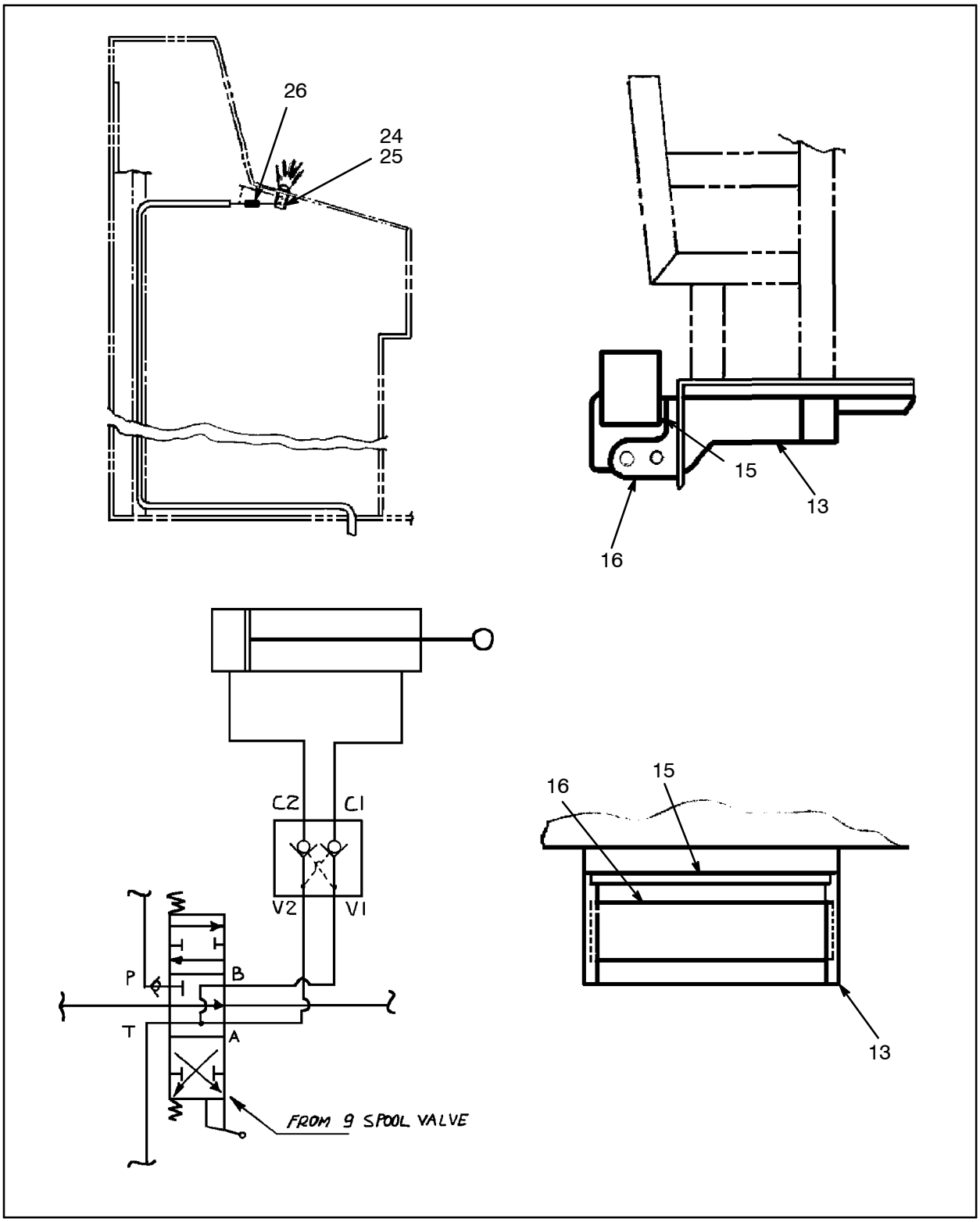

Figure 176 :PINNING, TOWER – INSTALL
D57388803 REV03

57388803 PINNING, TOWER–INSTALL

REF.	PART NO.	QTY.	UNIT	DESCRIPTION
002	57531626	1	EA	CYLINDER, HYDRAULIC
	57512006	1	EA	● - SEAL KIT
003	95342028	2	EA	PIN, HINGE
004	95093381	4	EA	PIN, COTTER–3/16 X 1–3/4
005	57141715	1	EA	PIN,TOWER LOCKING
006	95081709	4	EA	WASHER, FLAT–1”
007	95329975	2	EA	FITTING, HYD
008	56949399	1	EA	HOSE ASSY
009	56954076	1	EA	HOSE ASSY
013	57389330	2	EA	PLATE, TOWER PINNING
015	57389694	1	EA	BAR FLAT, 1X3.50X15.50
016	57389686	1	EA	BAR FLAT, 3/8 X 3 X 14.75
017	95364972	2	EA	FITTING, HYD
018	56949407	2	EA	HOSE ASSY
019	57359176	1	EA	BRACKET, LIMIT SWITCH
020	50518653	1	EA	SWITCH, LIMIT
021	95928982	4	EA	SCREW, CAP–1/4–20 X 3/4
022	95934766	4	EA	WASHER, LOCK–1/4 PLATED
023	50625946	1	EA	CONNECTOR
024	50270040	1	EA	LIGHT, PILOT
025	50611235	1	EA	LAMP, PANEL
026	56762248	1	EA	CONNECTOR, SPLICE
027	95356903	4	EA	FITTING, HYD
028	50462944	1	EA	VALVE, CHECK–DBL PILOT OP
029	52208691	1	EA	BRACKET, MOUNTING
030	56968084	2	EA	HOSE ASSY

WARNING: This manual contains data SPECIFIC to the drilling rig with serial number: 7341.

57388803 PINNING, TOWER – INSTALL

This page is blank.

57395147 CONTROLS, SPEED

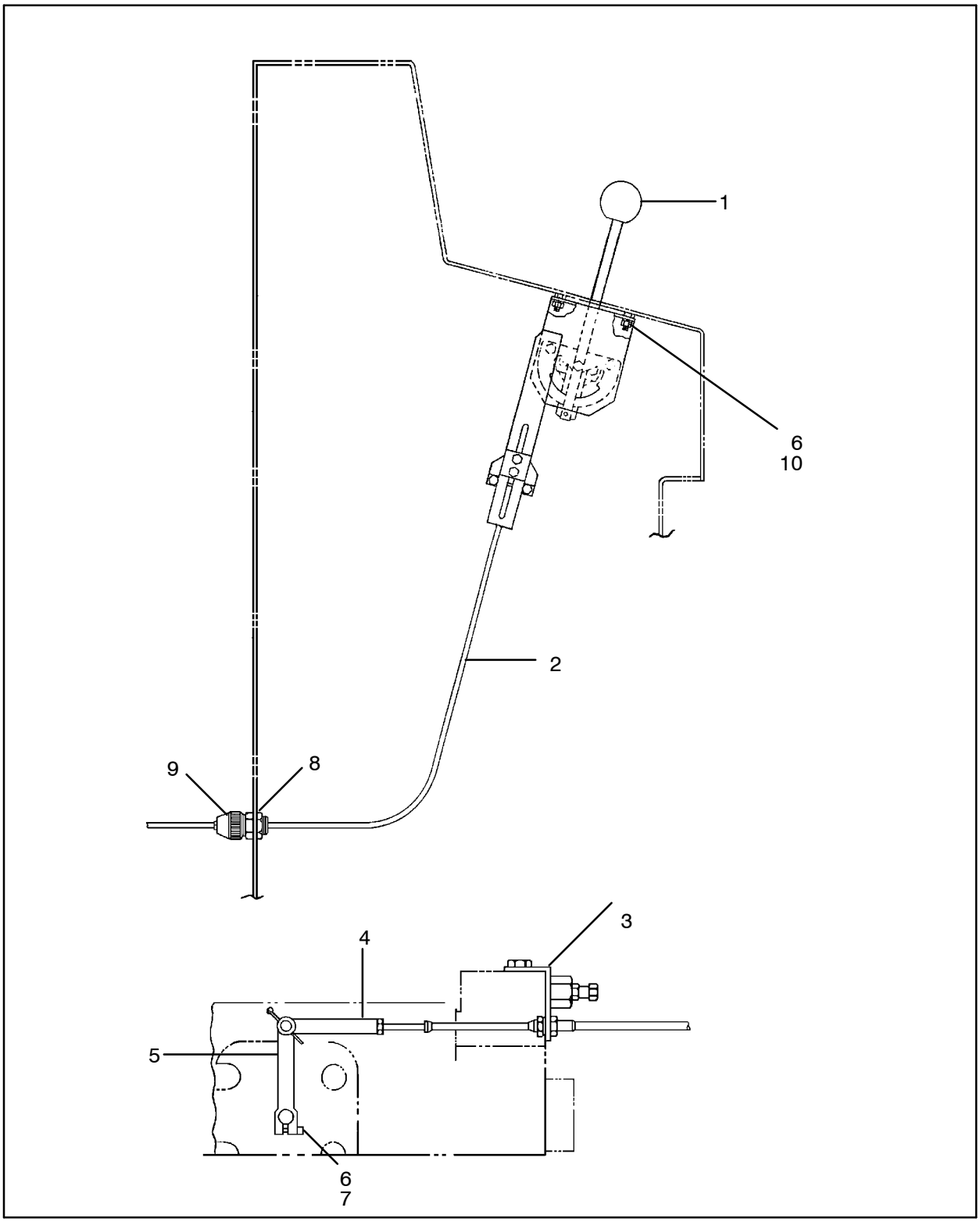

Figure 177 :CONTROLS, SPEED
D57395147 REV 00

WARNING: This manual contains data SPECIFIC to the drilling rig with serial number: 7341.

57395147 CONTROLS, SPEED

REF.	PART NO.	QTY.	UNIT	DESCRIPTION
001	52158094	2	EA	CONTROL
	57115503	1	EA	● - KNOB, TRANS. SHFT CONTROL
	57176737	1	EA	● - SWIVELS
002	50612506	2	EA	CABLE,CONTRL
003	57500217	2	EA	BRACKET,CABLE PUMP MTG
004	50248848	2	EA	CLEVIS
005	57503682	2	EA	LINK, MAIN PUMP CONTROLS
006	95096129	10	EA	SUB 95959136–LOCKWASHER
007	95067609	2	EA	SCREW, CAP–1/4–20 X 3/4
008	50619915	2	EA	NUT, LOCK–1/2" CONDUIT
009	50696939	2	EA	CONNECTOR, CORD GRIP
010	95931564	8	EA	NUT, HEX–1/4–20

57523409 TOWER RAISE CYL INSTL–25’

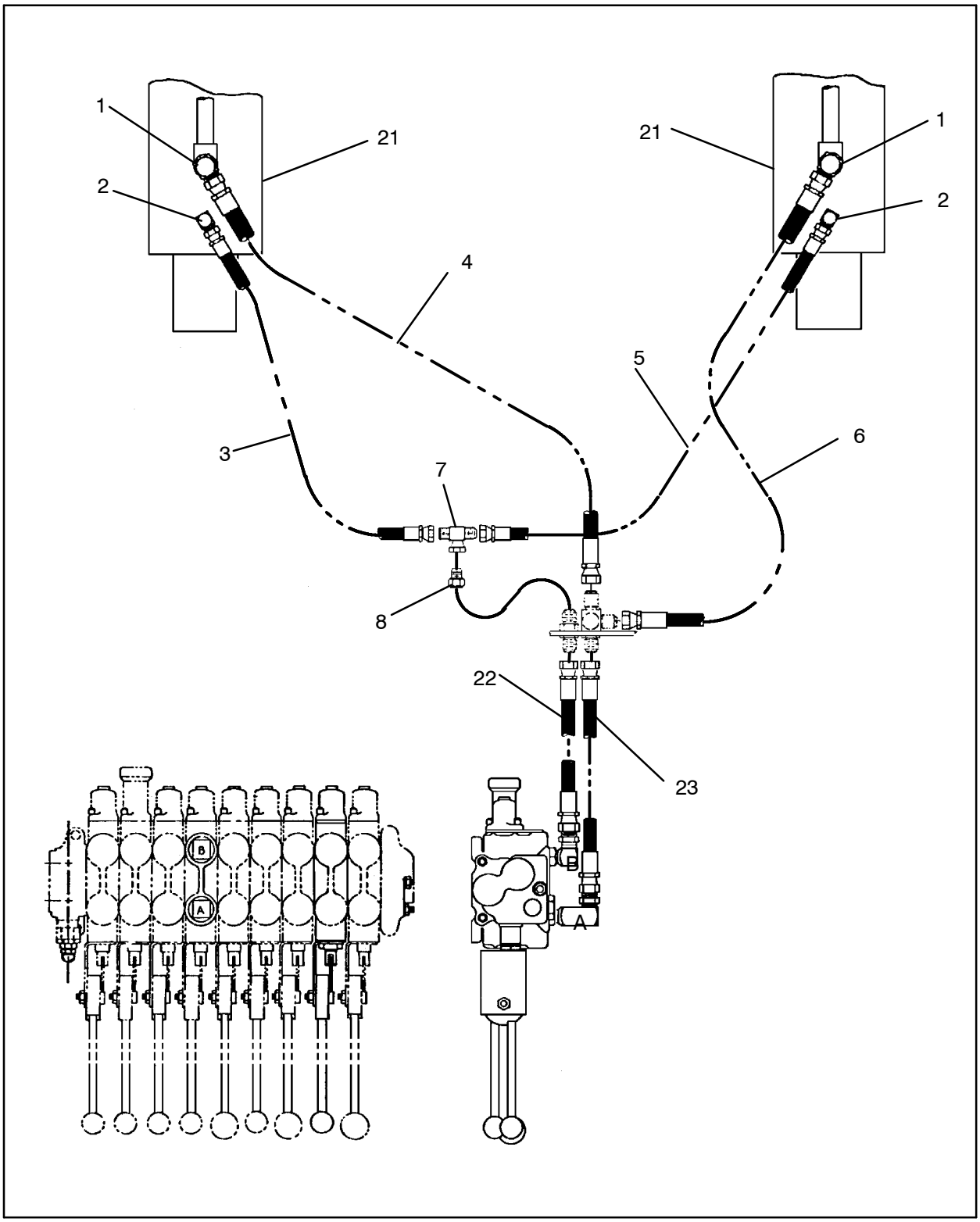

Figure 178 :TOWER RAISE CYL INSTL–25’
E57388795 REV 01

57523409 TOWER RAISE CYL INSTL–25’

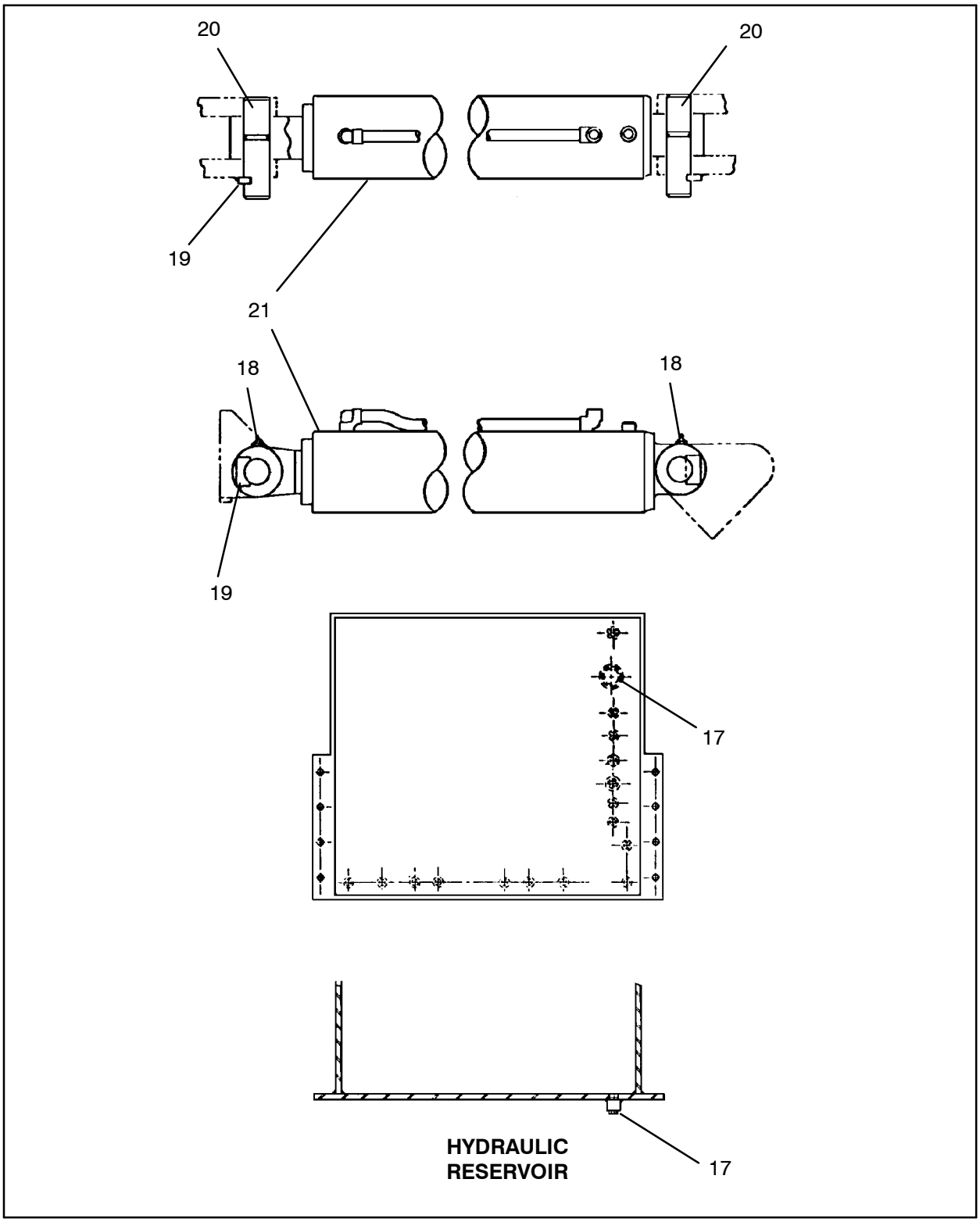

Figure 179 :TOWER RAISE CYL INSTL–25’
E57388795 REV 01

57523409 TOWER RAISE CYL INSTL–25'

REF.	PART NO.	QTY.	UNIT	DESCRIPTION
001	95329975	2	EA	FITTING, HYD
002	95365094	2	EA	ADAPTER–90DEG,ORING/JIC
003	56974587	1	EA	HOSE ASSY
004	58154329	1	EA	HOSE ASSY
005	56964281	1	EA	HOSE ASSY
006	56968084	1	EA	HOSE ASSY
007	95649844	1	EA	FITTING, HYD
008	56955867	1	EA	FITTING, HYD
017	95666996	1	EA	FITTING, HYD
018	95201281	4	EA	FITTING, LUBE
019	50813575	4	EA	PLATE, LOCKING
020	50813567	2	EA	PIN, CYLINDER
021	57488942	2	EA	CYLINDER, HYDRAULIC
	57511222	1	EA	● - SEAL KIT, CYLINDER
022	56949407	1	EA	HOSE ASSY
023	56961824	1	EA	HOSE ASSY
024	57388787	2	EA	PIN, TOWER RAISE CYL

WARNING: This manual contains data SPECIFIC to the drilling rig with serial number: 7341.

57523409 TOWER RAISE CYL INSTL–25’

This page is blank.

57450132 WIRING, BASIC – QSK

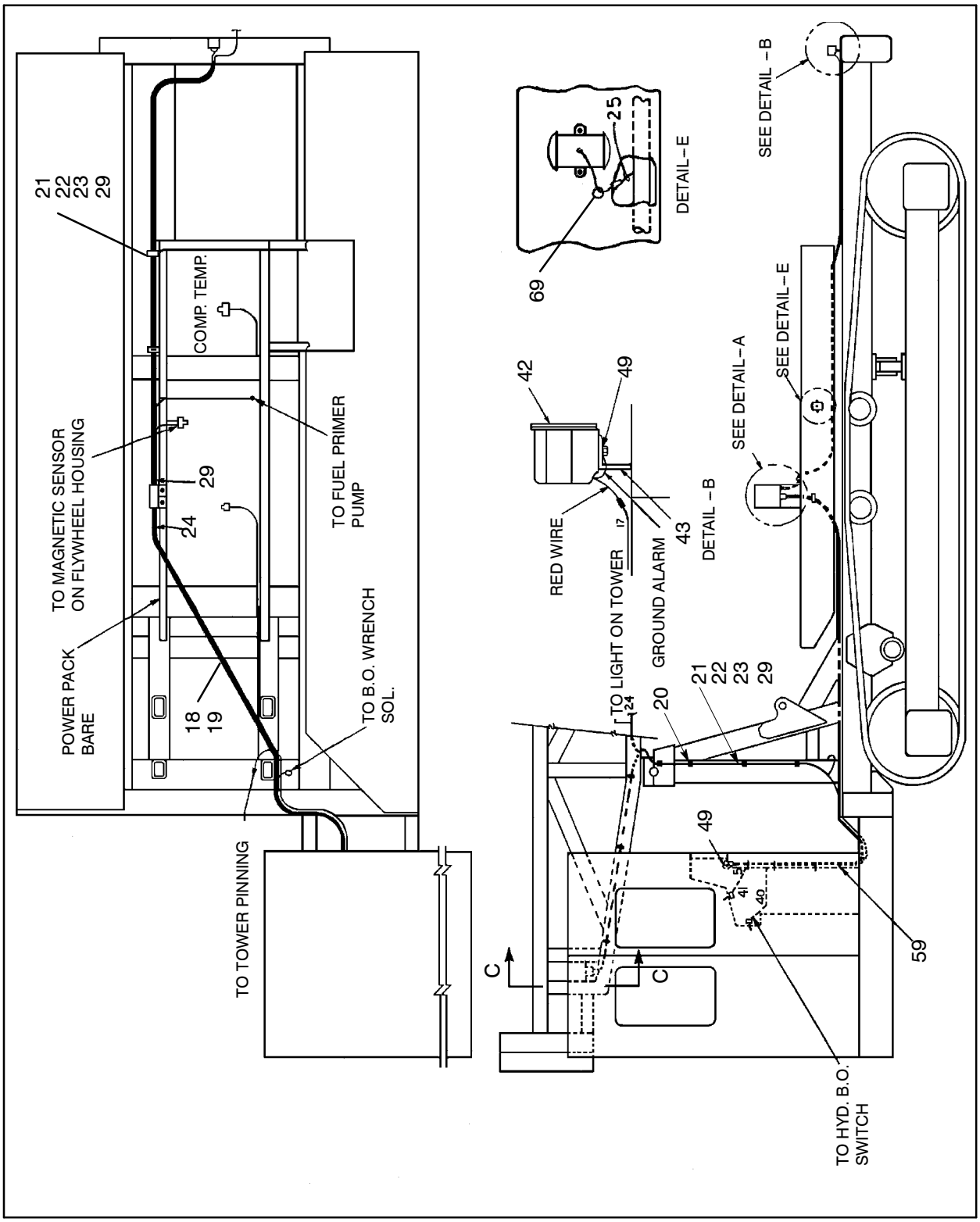

Figure 180 :WIRING, BASIC – QSK
D57450132 REV 00

WARNING: This manual contains data SPECIFIC to the drilling rig with serial number: 7341.

57450132 WIRING, BASIC – QSK

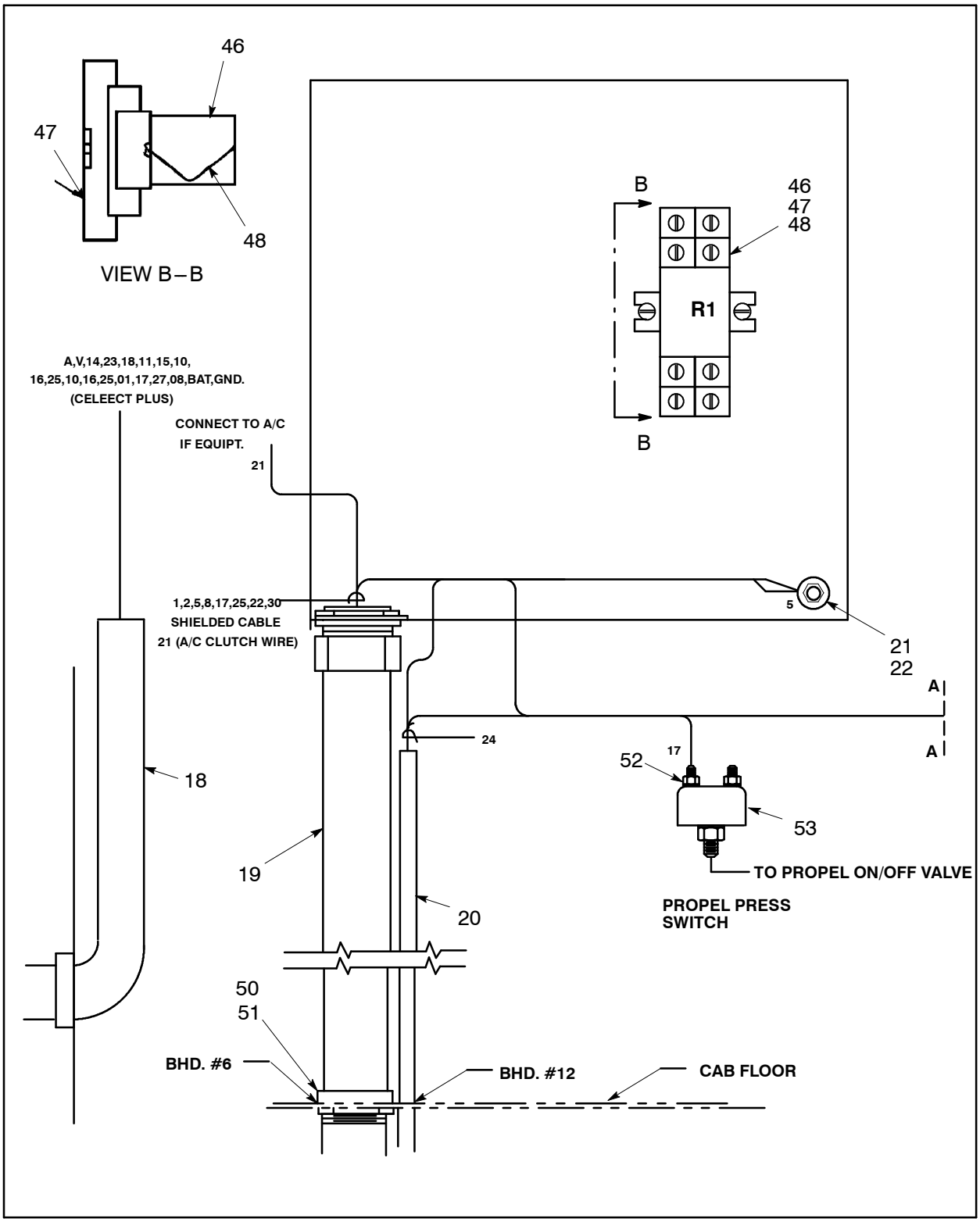

Figure 181 :WIRING, BASIC – QSK
D57450132 REV 00

57450132 WIRING, BASIC – QSK

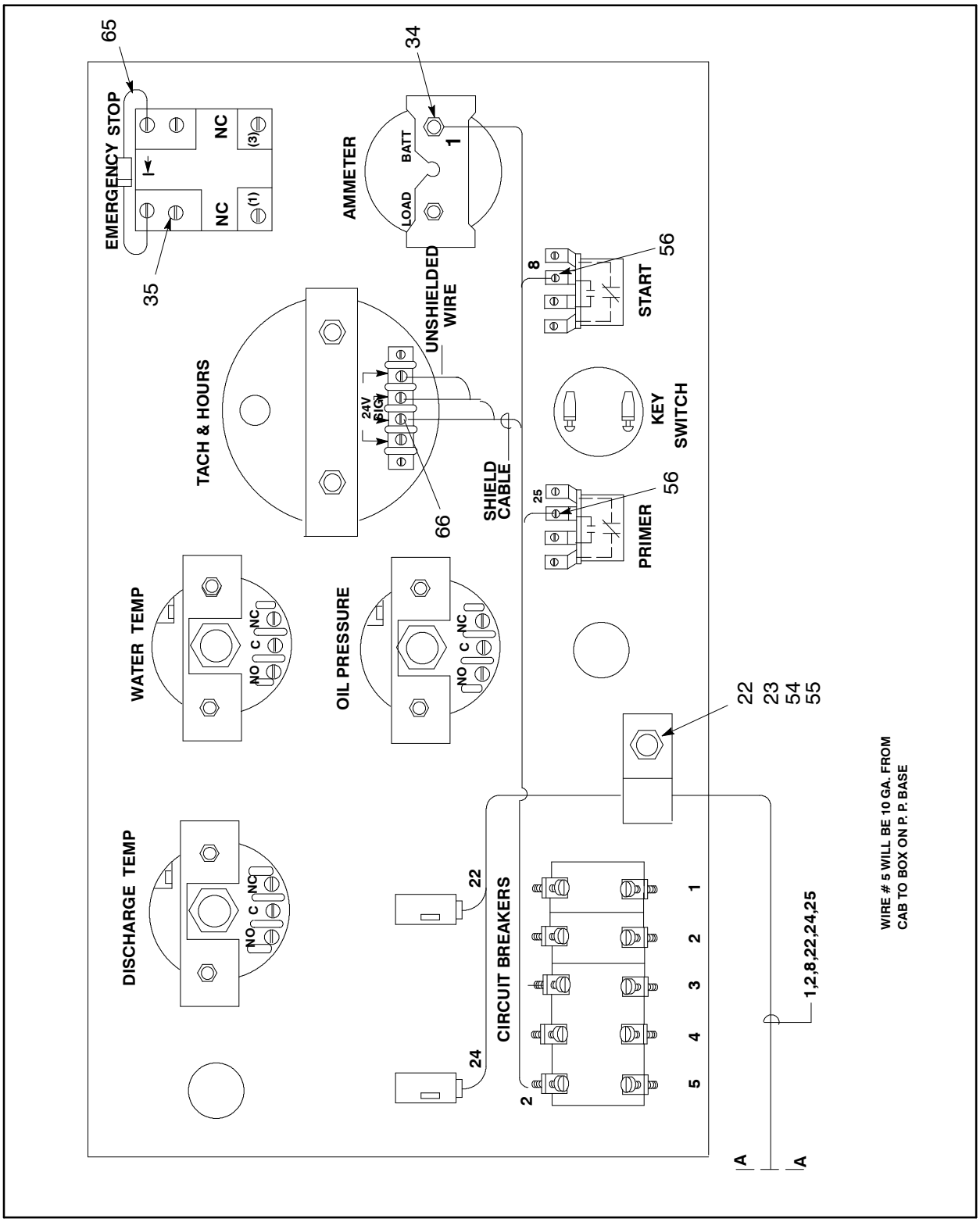

Figure 182 :WIRING, BASIC – QSK
D57450132 REV 00

WARNING: This manual contains data SPECIFIC to the drilling rig with serial number: 7341.

57450132 WIRING, BASIC – QSK

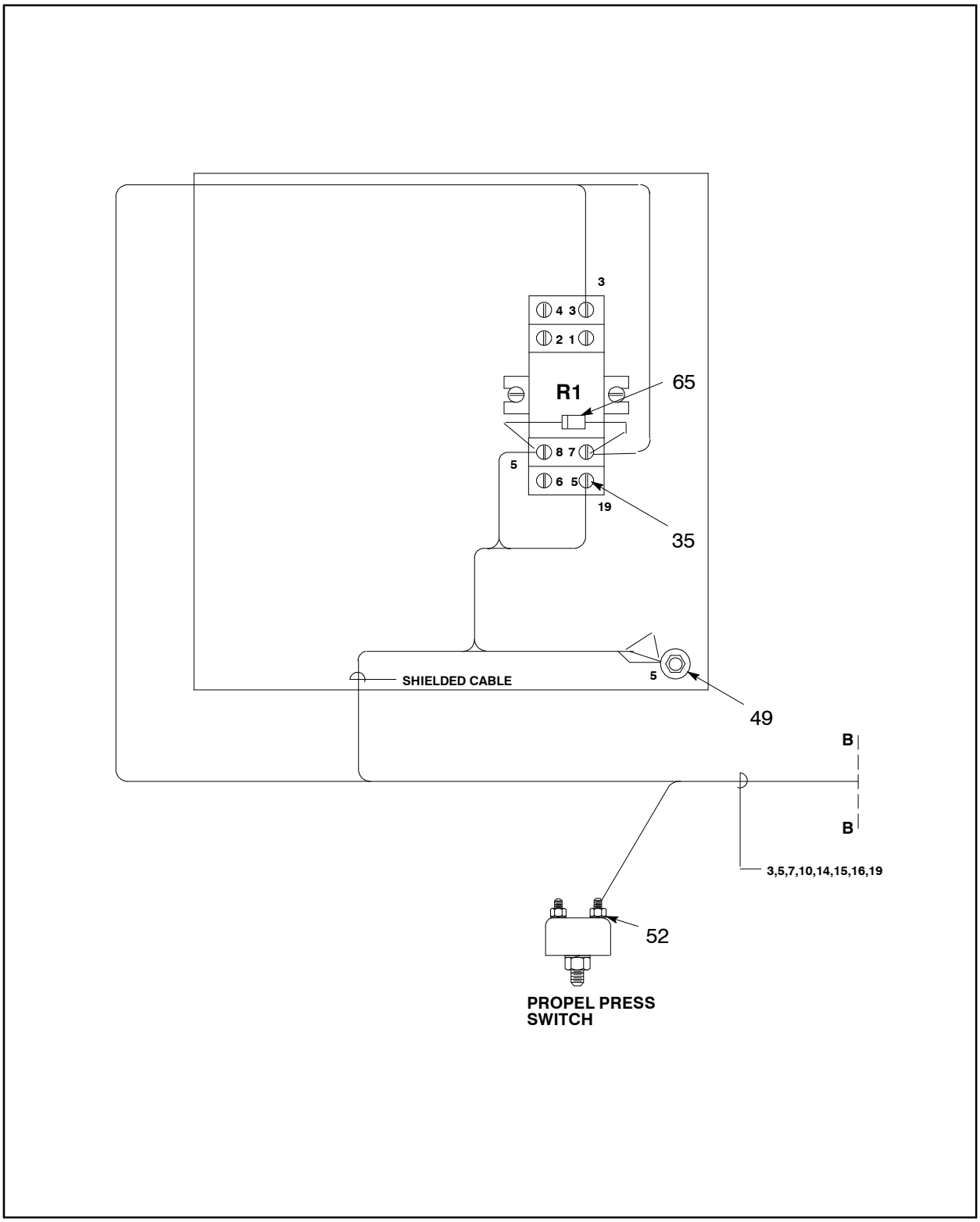

Figure 183 :WIRING, BASIC – QSK
D57450132 REV 00

57450132 WIRING, BASIC – QSK

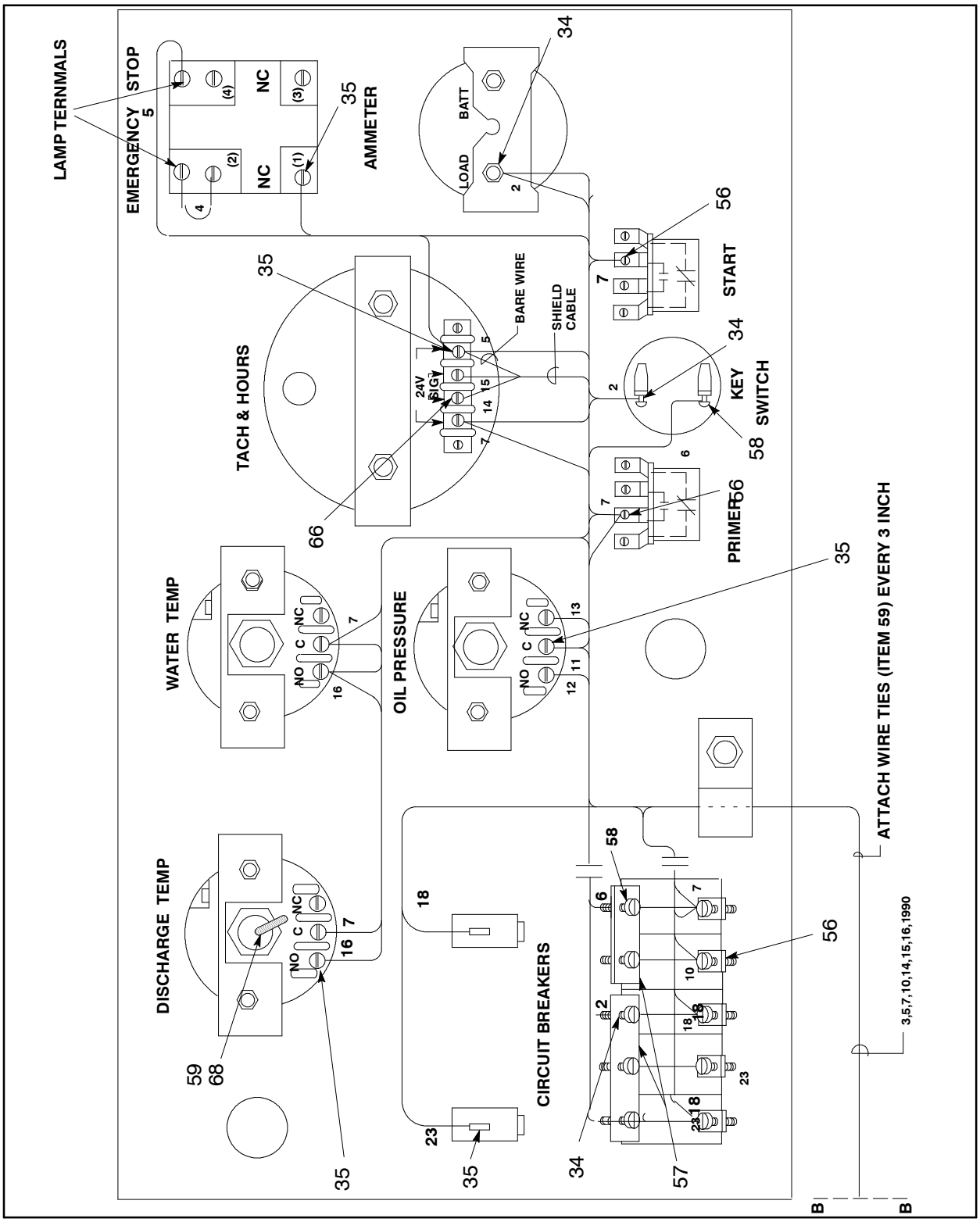

Figure 184 :WIRING, BASIC – QSK
D57450132 REV 00

WARNING: This manual contains data SPECIFIC to the drilling rig with serial number: 7341.

57450132 WIRING, BASIC – QSK

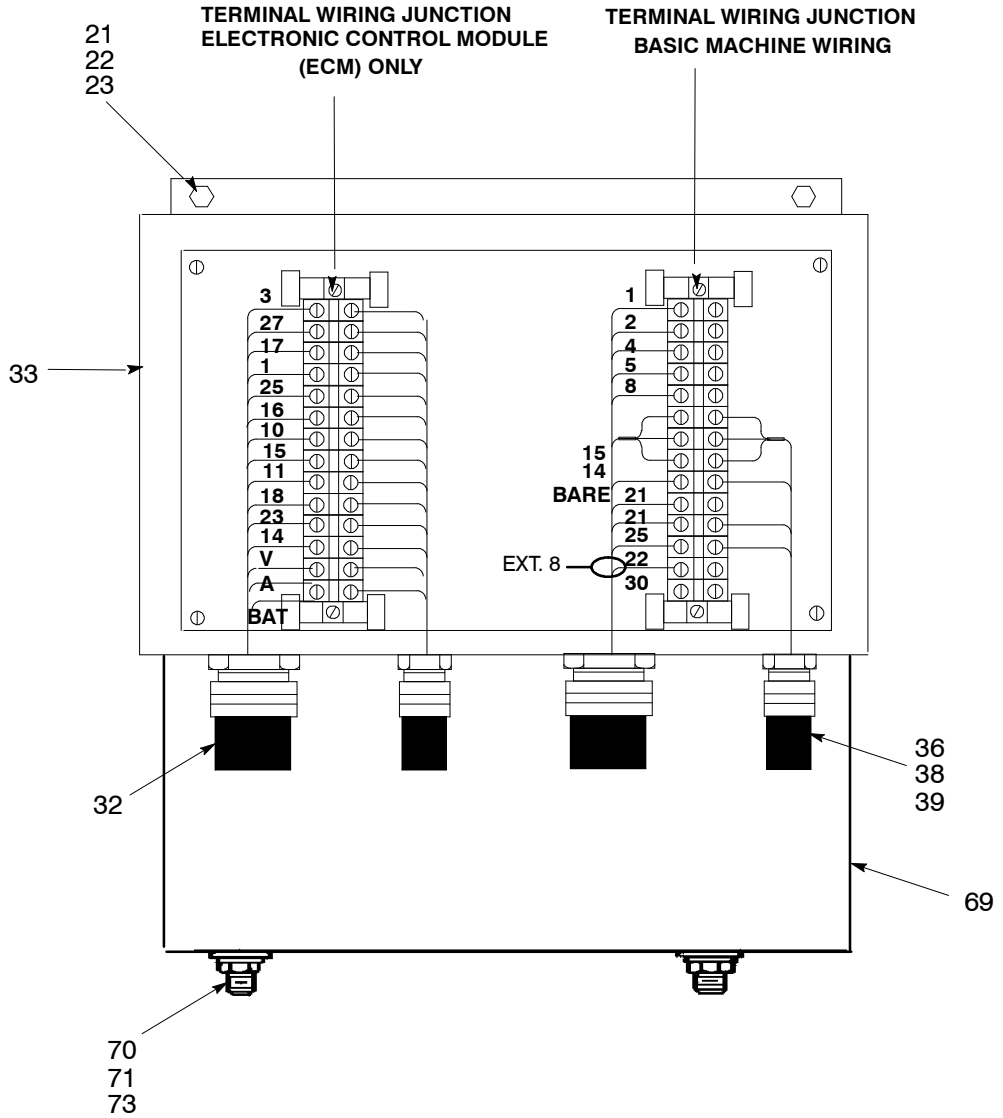

Figure 185 :WIRING, BASIC – QSK
D57450132 REV 00

57450132 WIRING, BASIC – QSK

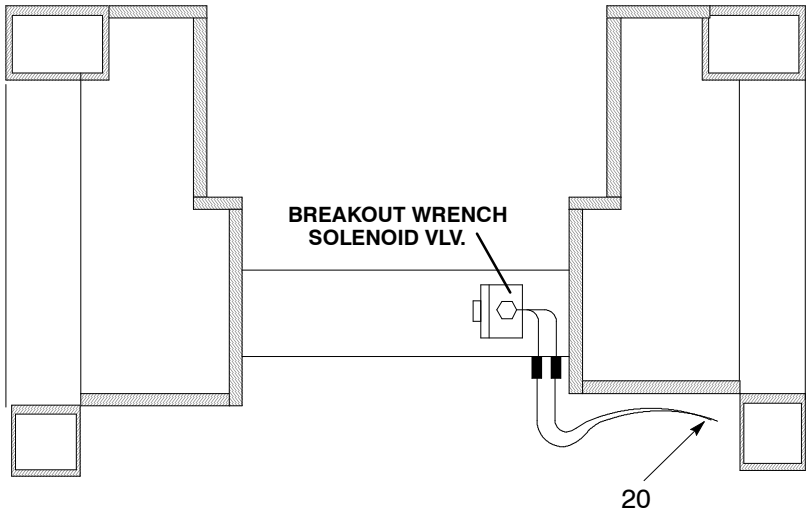

VIEW C – C

WIRE DESCRIPTION			
COLOR	GAGE (AWG)	WIRE NUMBERS	CIRUIT
RED	8	1,2	(+) POSITIVE MAIN FEEDER
GREEN	14	7,8,25,30,3,4,3A	START,STOP,PRIMER,ETHER
BLUE	14	10,45,46,47,17,17A,41	TRAM,PRESS,PINNING
PURPLE	14	18,22,23,24	LIGHTS
WHITE	14	21,20,19	A/C
BLACK	10,14	5	GROUND
SHILD CABLE	18/2 CON	BLACK/CLEAR (14,15BARE)	MAGNETIC PICKUP
RED	10	1,6,35	JUMPER WIRE OR ' BUSS BAR
GRAY	14	M,K,J,L,A,V,14,23,18, 11,15,10,16,25,01,17, C,B,A,BAT,GND.	CELECT PLUS ENGINE CONTROL
CABLE	18/2	27,08	CELECT PLUS

Figure 186 :WIRING, BASIC – QSK
D57450132 REV 00

WARNING: This manual contains data SPECIFIC to the drilling rig with serial number: 7341.

57450132 WIRING, BASIC – QSK

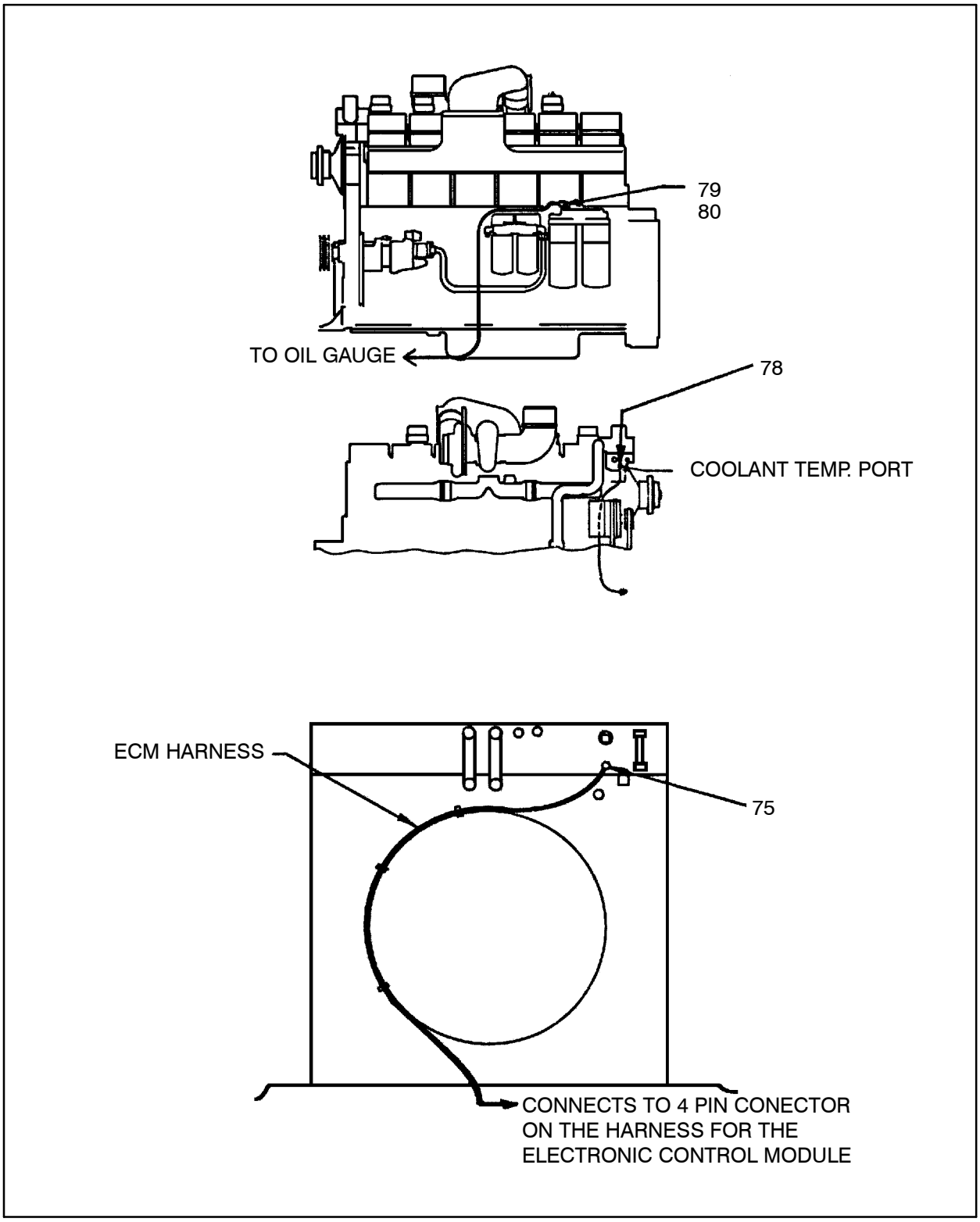

Figure 187 :WIRING, BASIC – QSK
D57450132 REV 00

57450132 WIRING, BASIC–QSK

REF.	PART NO.	QTY.	UNIT	DESCRIPTION
001	50465293	48.00	IN	WIRE, 8AWG–RED
002	50625938	60.00	IN	WIRE, 14AWG–GREEN
003	50812429	36.00	IN	WIRE, 14AWG–BLUE
004	50623065	24.00	IN	WIRE, 14AWG–VIOLET
006	50249655	36.00	IN	WIRE, 14AWG–BLACK
007	85771715	36.00	IN	CABLE, 18/2
009	57093080	100	EA	MARKER, WIRE
018	57500787	1	EA	HARNESS,WIRE QUANTUM
019	57500209	1	EA	HARNESS, WIRE–COMMON
020	57497257	1	EA	HARNESS, LIGHT–DRLL/TRAM
	57358830	72.00	IN	● - CONDUIT, 3/8” NYLON
	50623065	146.00	IN	● - WIRE, 14AWG–VIOLET
021	95928982	18	EA	SCREW, CAP–1/4–20 X 3/4
022	95959144	19	EA	WASHER, LOCK–5/16
023	95929782	17	EA	NUT, HEX–5/16–18
024	52236791	3	AS	CLAMP ASSY, 3/4”
	95934766	1	EA	● - WASHER, LOCK–1/4 PLATED
029	95371092	6	EA	CLAMP, HOSE
032	52236569	1	EA	GASKET, 3/4
033	57490260	1	EA	BOX ASSY–JUNCTION
034	56951858	4	EA	TERMINAL
035	95329249	32	EA	TERMINAL
036	50619915	2	EA	NUT, LOCK–1/2” CONDUIT
038	50625839	2	EA	BUSHING, CONDUIT
039	56992191	2	EA	CONNECTOR
042	57366395	1	AS	ALARM KIT, BACKUP
	57366387	1	EA	● - ALARM, BACKUP–12 TO 36VD
	57014672	1	EA	● - ANGLE
	95929006	2	EA	● - SCREW, CAP–5/16–18 X 1
	95929782	2	EA	● - NUT, HEX–5/16–18
	95934303	2	EA	● - WASHER, LOCK–5/16 PLATED
	95922225	4	EA	● - WASHER, FLAT–5/16
043	57014672	1	EA	ANGLE
046	57137606	1	EA	RELAY
047	57137614	1	EA	SCREW TERMINAL SOCKET
048	57137622	1	EA	SPRING, HOLD DOWN
049	95373841	7	EA	TERMINAL

WARNING: This manual contains data SPECIFIC to the drilling rig with serial number: 7341.

57450132 WIRING, BASIC–QSK

REF.	PART NO.	QTY.	UNIT	DESCRIPTION
050	95360996	1	EA	BUSHING,MALE
051	50628726	1	EA	BUSHING
052	95484408	3	EA	TERMINAL
053	52232428	1	EA	SWITCH, PRESSURE
054	95958849	1	EA	SCREW,FLAT HD–1/4–20X7/8
055	95351904	1	EA	CLAMP, HOSE
056	95329256	16	EA	TERMINAL
057	57036881	1	EA	BAR, COPPER
058	95359600	3	EA	TERMINAL
059	95748802	25	EA	TIE, CABLE
060	57168916	6.00	OZ	VARNISH, INSULATING
065	57196677	2	EA	DIODE, 3A, 600V
066	95843371	16	EA	TERMINAL
068	50247709	48.00	IN	TUBING, VINYL
069	57477697	1	EA	BRACKET–JUNCT BOX
070	95104170	2	EA	SCREW, CAP–1/2–13 X 1–1/2
071	95245767	2	EA	WASHER, BEVEL–1/2
073	95077285	2	EA	NUT,HEX STOP–1/2–13
075	57474140	1	EA	SWITCH, COOLANT–N14
077	57482655	1	EA	CAP,DATALINK–QSK/CELECT
078	57137663	1	EA	ADAPTER
079	95302170	1	EA	FITTING, HYD
080	57043234	1	EA	HOSE ASSY

57157869 LIGHTS, NIGHT

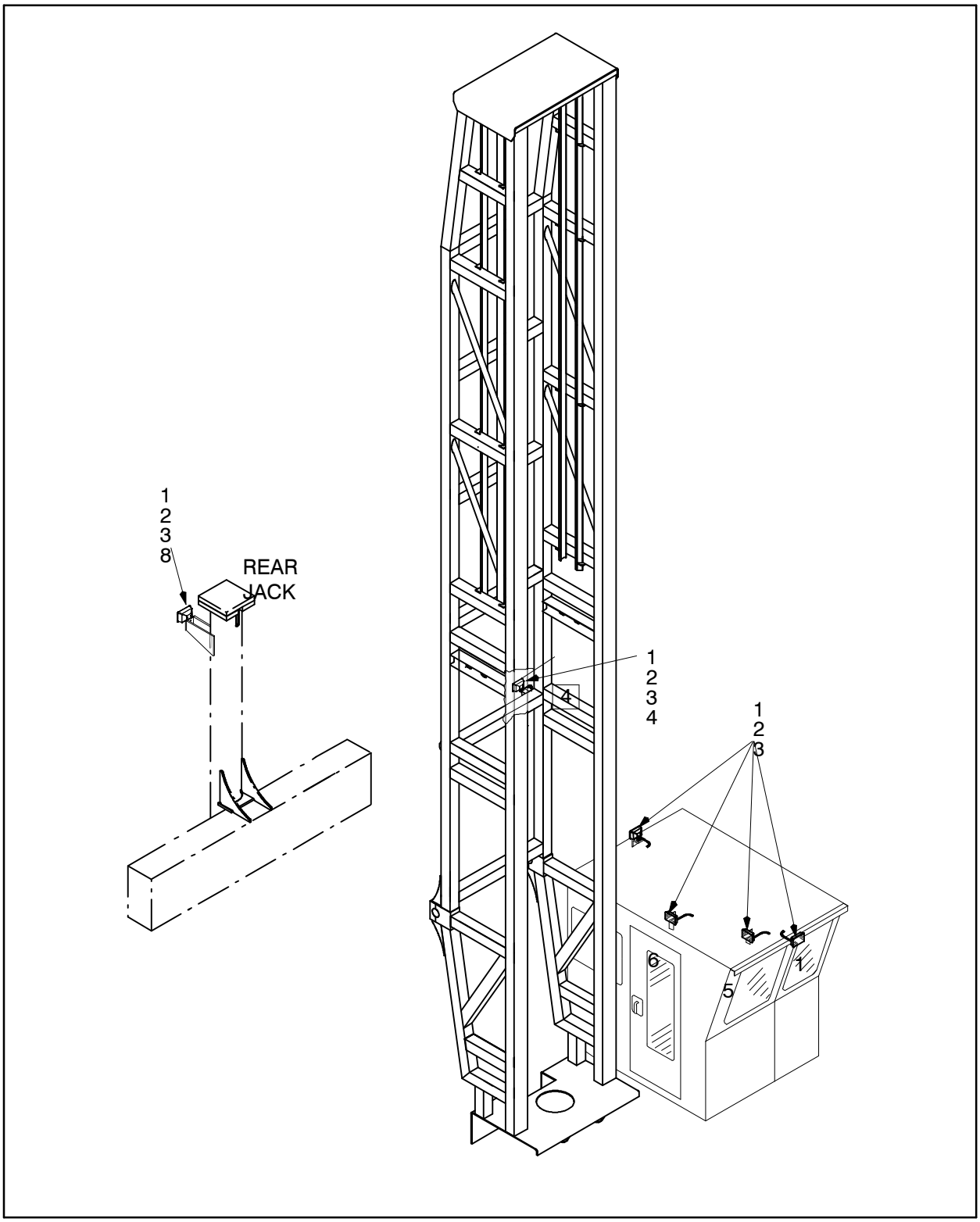

Figure 188 :LIGHTS, NIGHT
D57157869 REV 05

WARNING: This manual contains data SPECIFIC to the drilling rig with serial number: 7341.

57157869 LIGHTS, NIGHT

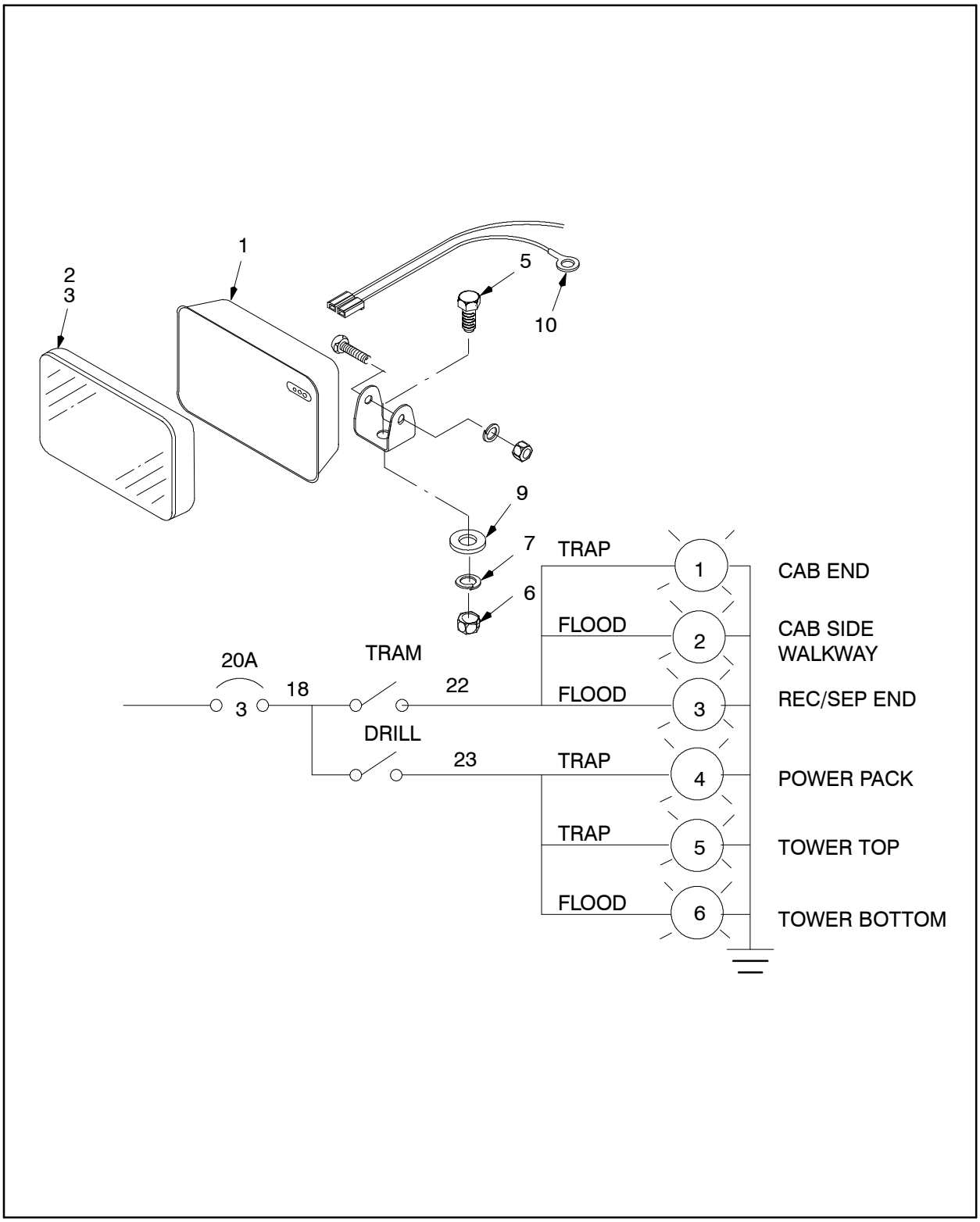

Figure 189 :LIGHTS, NIGHT
D57157869 REV 05

57157869 LIGHTS, NIGHT

REF.	PART NO.	QTY.	UNIT	DESCRIPTION
001	57157885	1	EA	HOUSING, 4X6 LIGHT
001	57157885	1	EA	HOUSING, 4X6 LIGHT
001	57157885	4	EA	HOUSING, 4X6 LIGHT
002	57157893	1	EA	LAMP, TRAP−70W HALOGEN
002	57157893	2	EA	LAMP, TRAP−70W HALOGEN
003	57147282	1	EA	LAMP, FLOOD−70W HALOGEN
003	57147282	2	EA	LAMP, FLOOD−70W HALOGEN
004	56790330	1	EA	ANGLE
005	95104410	6	EA	SCREW, CAP−5/8−11 X 1−1/4
006	95077814	6	EA	NUT, HEX 5/8−11
007	95081790	6	EA	WASHER, LOCK−5/8
008	57157877	1	EA	BRACKET, LIGHT
009	95094314	6	EA	WASHER, FLAT−5/8
010	56944101	6	EA	TERMINAL
011	95301834	7	EA	CLAMP,HOSE
012	95103743	7	EA	SCREW, CAP−3/8−16 X 3/4
013	95922894	7	EA	NUT, HEX−3/8−16
014	95937413	7	EA	WASHER, LOCK−3/8 PLATED

WARNING: This manual contains data SPECIFIC to the drilling rig with serial number: 7341.

57157869 LIGHTS, NIGHT

This page is blank.

57404725 DUST COLLECTR INSTALL−3600

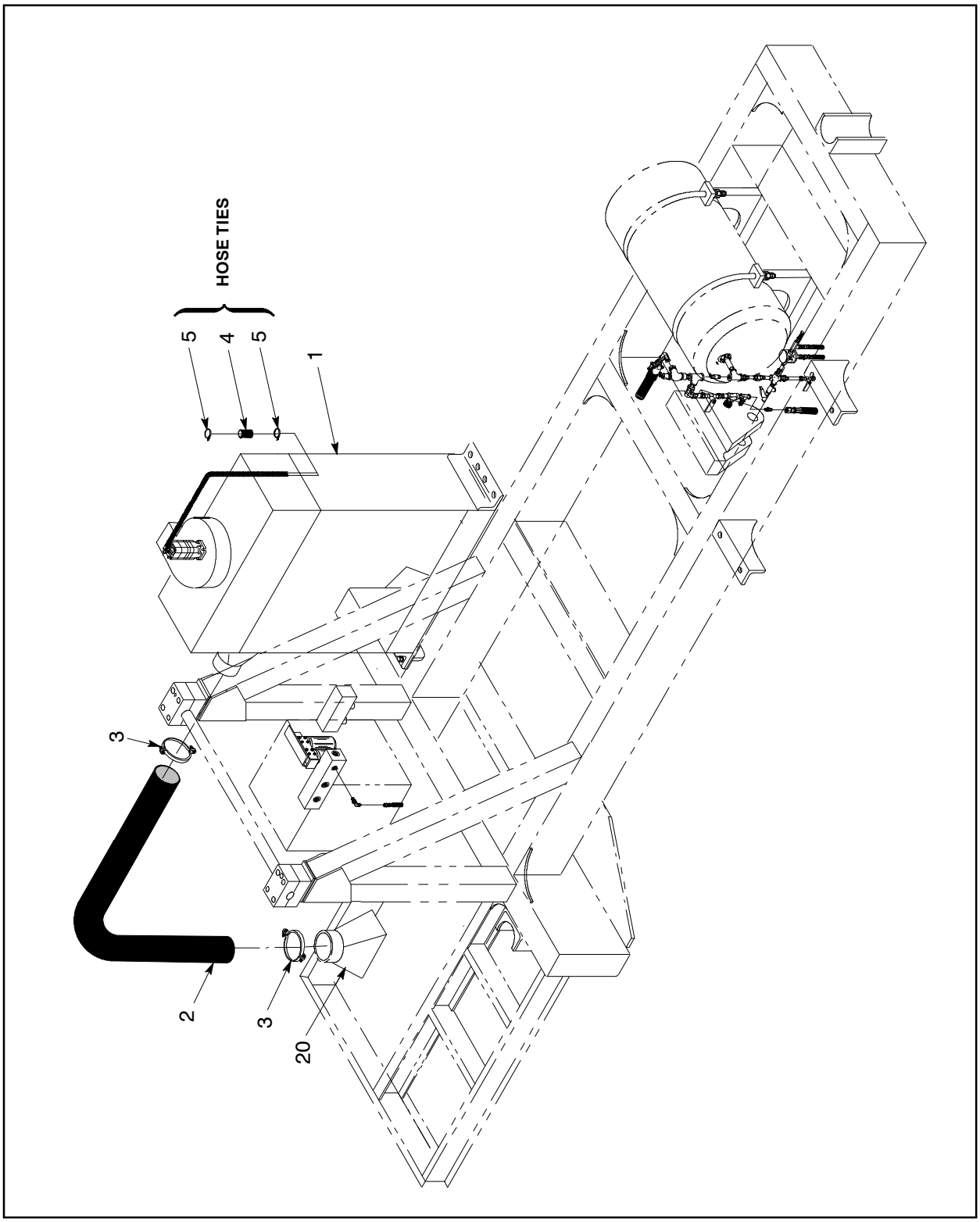

Figure 190 :DUST COLLECTR INSTALL−3600
E57284317 REV 06

WARNING: This manual contains data SPECIFIC to the drilling rig with serial number: 7341.

57404725 DUST COLLECTR INSTALL–3600

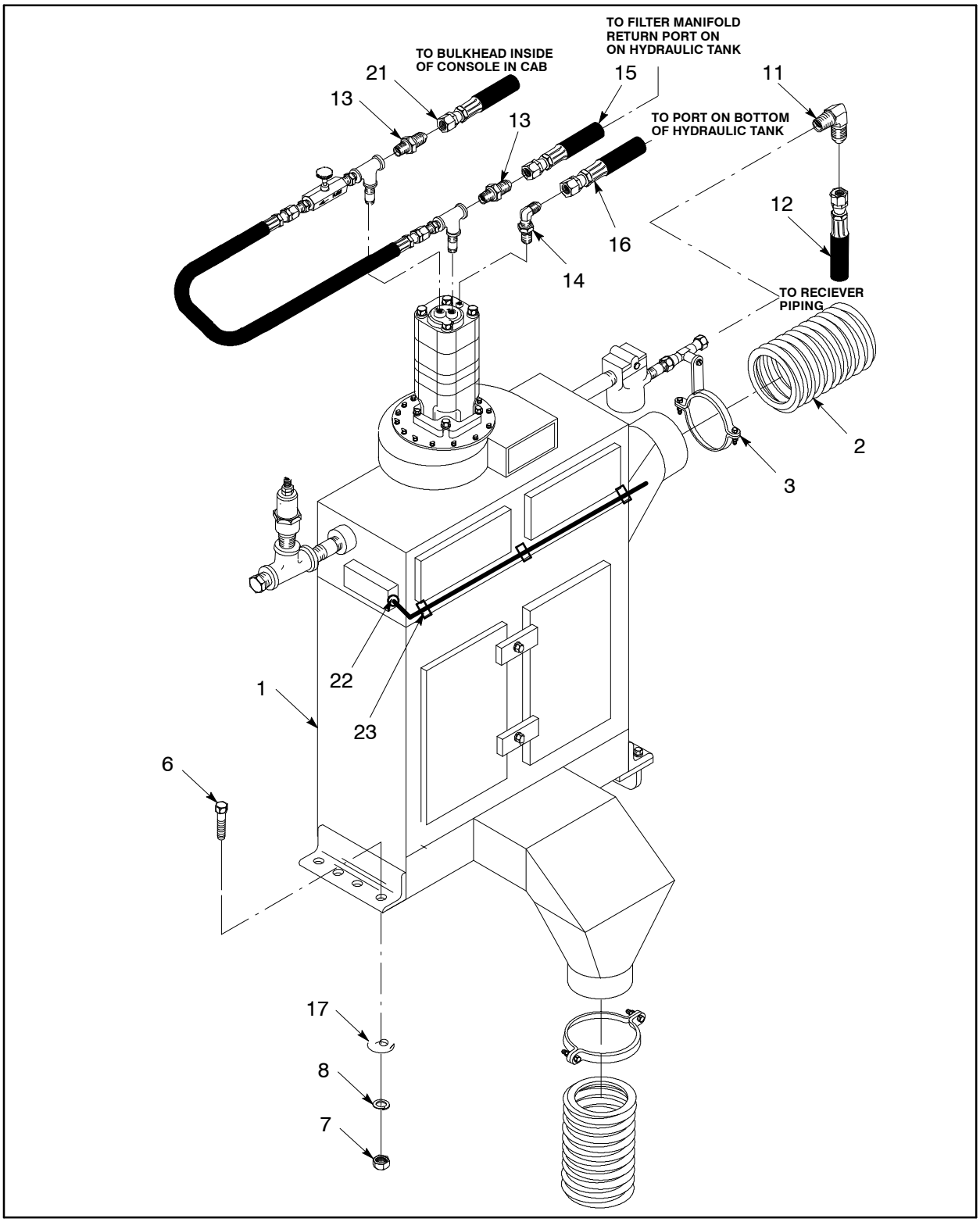

Figure 191 :DUST COLLECTR INSTALL–3600
E57284317 REV 06

57404725 DUST COLLECTR INSTALL−3600

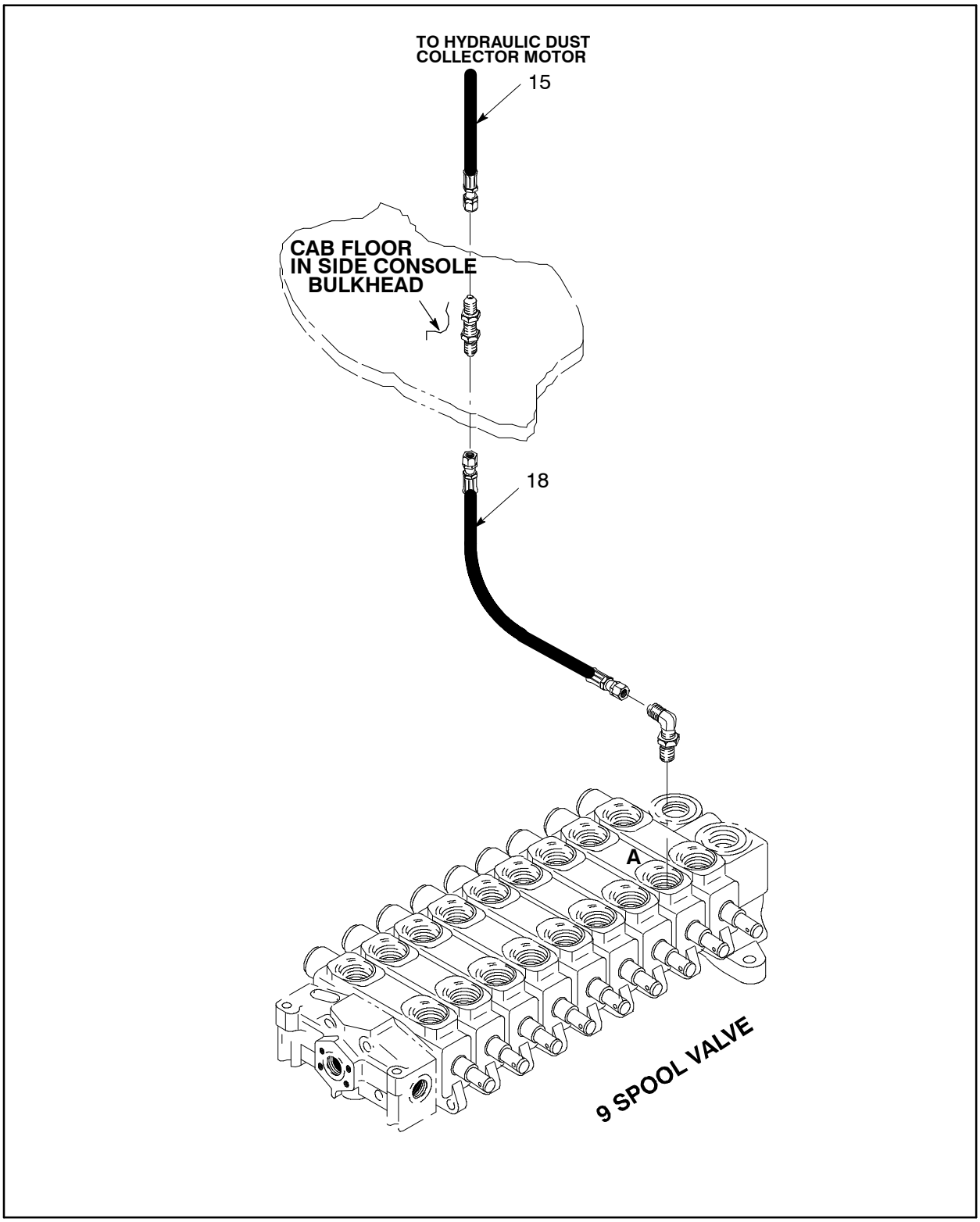

Figure 192 :DUST COLLECTR INSTALL−3600
E57284317 REV 06

WARNING: This manual contains data SPECIFIC to the drilling rig with serial number: 7341.

57404725 DUST COLLECTR INSTALL–3600

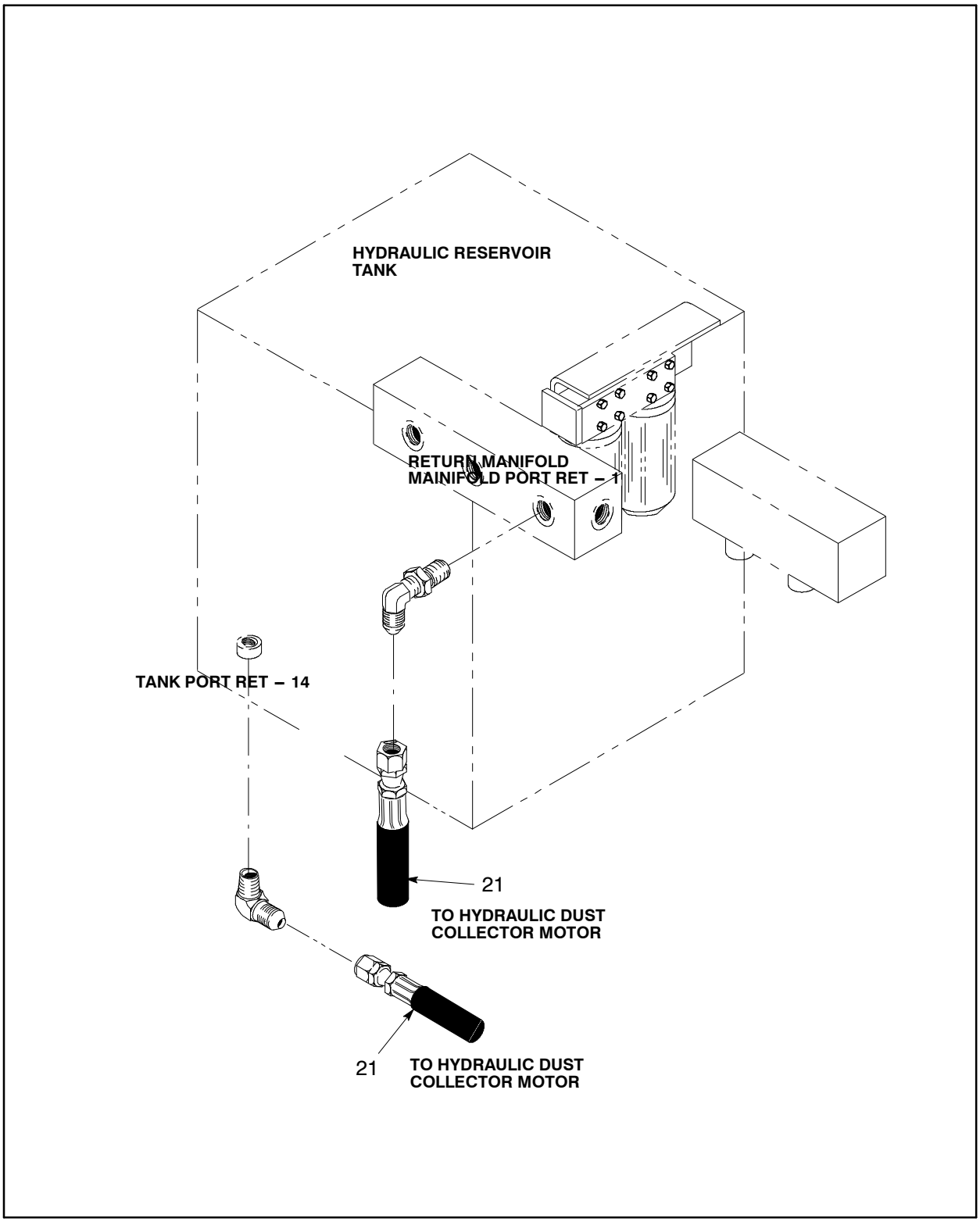

Figure 193 :DUST COLLECTR INSTALL–3600
E57284317 REV 06

57404725 DUST COLLECTR INSTALL–3600

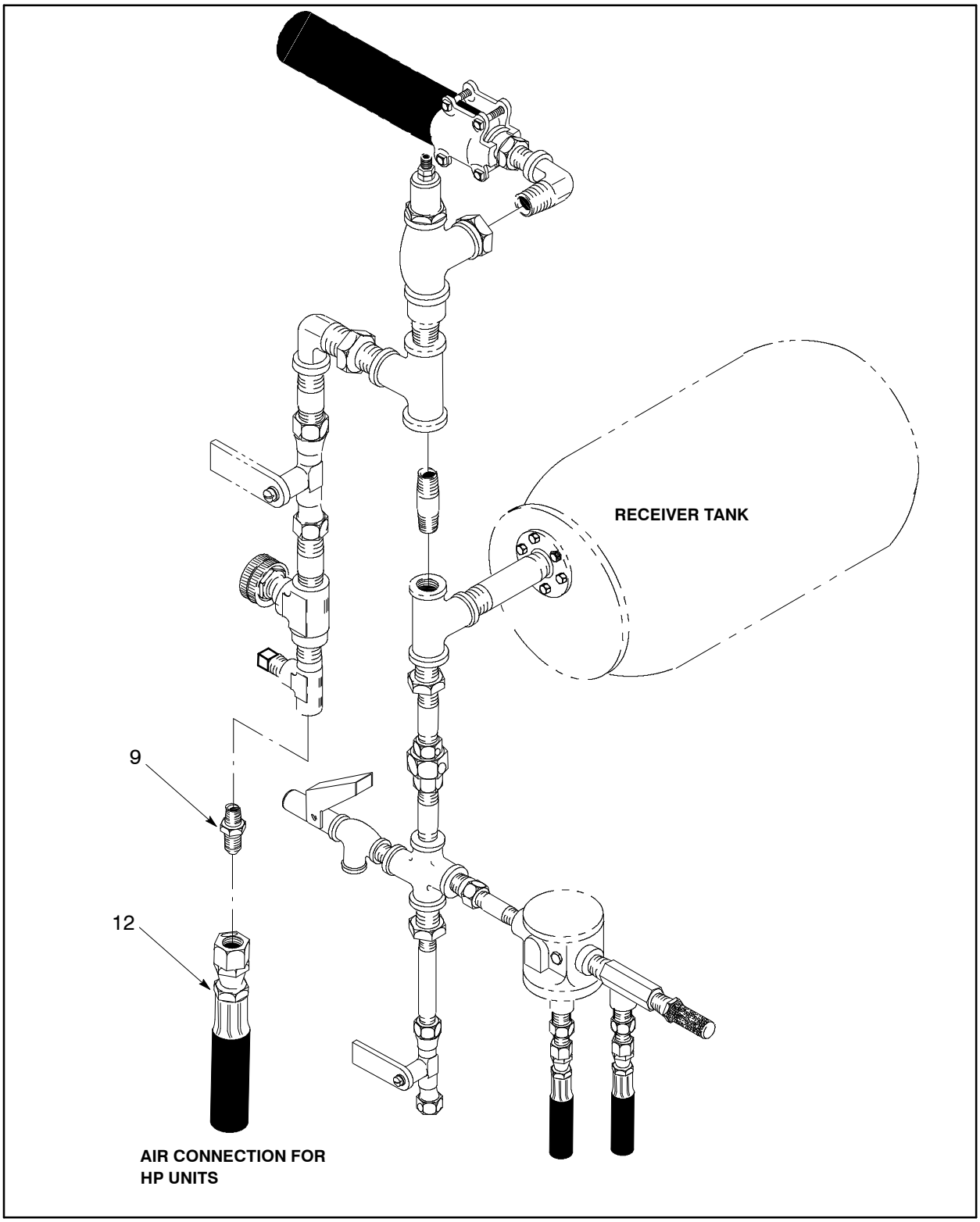

Figure 194 :DUST COLLECTR INSTALL–3600
E57284317 REV 06

WARNING: This manual contains data SPECIFIC to the drilling rig with serial number: 7341.

57404725 DUST COLLECTR INSTALL–3600

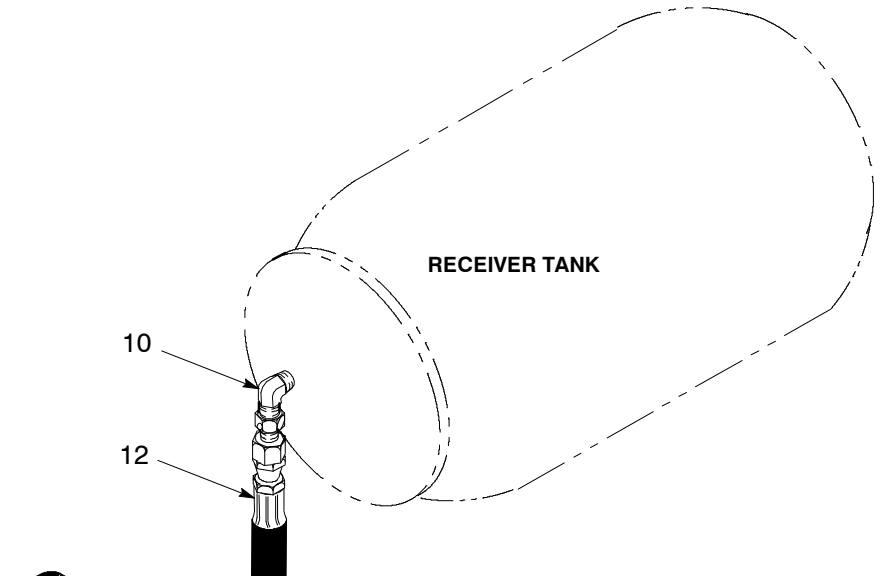

AIR CONNECTION FOR XL TANKS

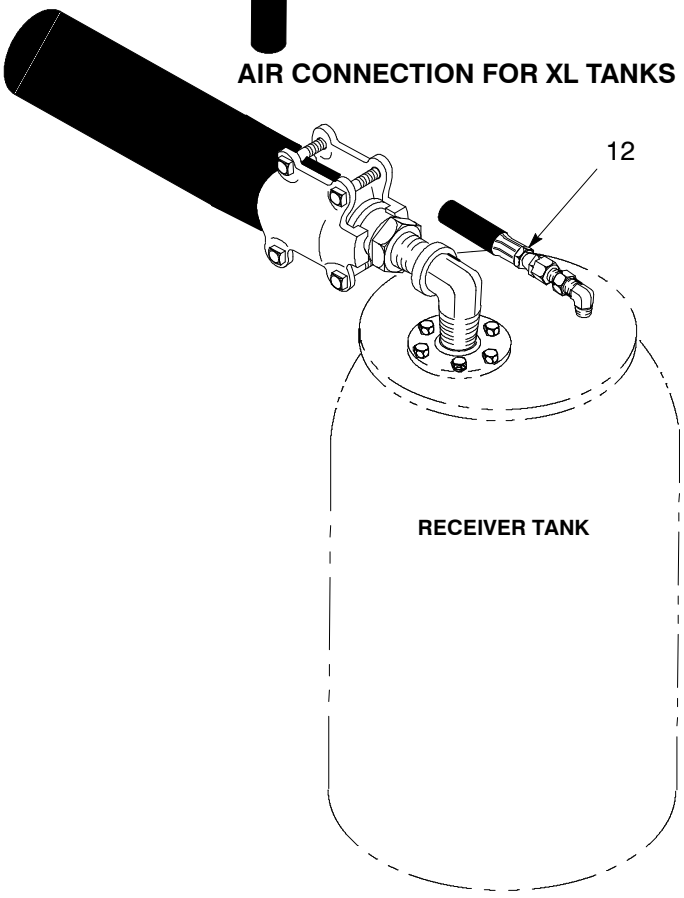

AIR CONNECTION FOR XL VERTICAL TANKS

Figure 195 :DUST COLLECTR INSTALL–3600
E57284317 REV 06

57404725 DUST COLLECTR INSTALL–3600

REF.	PART NO.	QTY.	UNIT	DESCRIPTION	
001	57284309	1	AS	DUST COLLECTOR–IR 3600	*(See figure 196)*
002	57076507	1	EA	HOSE, SUCTION–8"X 8'–4"	
003	56958523	2	EA	CLAMP, HOSE	
004	56989338	6.00	IN	HOSE, RADIATOR–BULK	
005	56780729	2	EA	TIE, CABLE	
006	95104162	8	EA	SCREW, CAP–1/2–13 X 1–3/8	
007	95077798	8	EA	NUT, HEX–1/2–13	
008	95081824	8	EA	WASHER, LOCK–1/2	
009	95219721	1	EA	FITTING, HYD	
010	95303335	1	EA	FITTING, HYD	
011	95279501	1	EA	FITTING	
012	57057929	1	EA	HOSE ASSY	
013	95219747	2	EA	FITTING, HYD	
014	95341665	1	EA	FITTING, HYD–90 DEG	
015	57249096	1	EA	HOSE ASSY	
016	57097909	1	EA	HOSE ASSY	
017	95081667	8	EA	WASHER, FLAT–1/2	
018	56957780	1	EA	HOSE ASSY	
020	57502411	1	EA	TRANSITION	
021	57311920	1	EA	HOSE ASSY	
022	50625946	1	EA	CONNECTOR	
023	95371092	9	EA	CLAMP, HOSE	

This page is blank.

57284309 DUST COLLECTOR – IR 3600

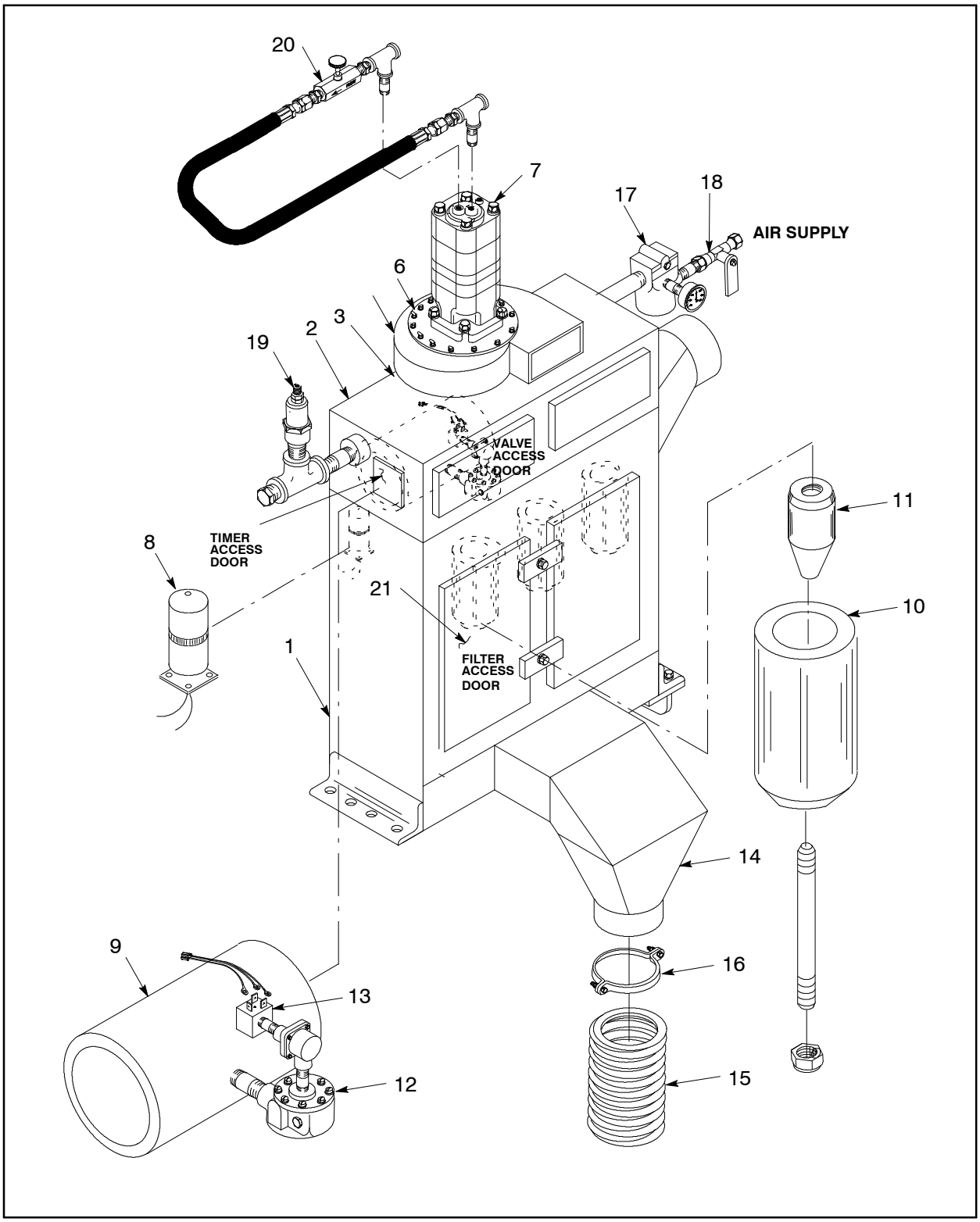

Figure 196 :DUST COLLECTOR – IR 3600
C57284309 REV 02

WARNING: This manual contains data SPECIFIC to the drilling rig with serial number: 7341.

57284309 DUST COLLECTOR – IR 3600

REF.	PART NO.	QTY.	UNIT	DESCRIPTION	
001	57284630	1	EA	LOWER HSG SECTION	
002	57284648	1	EA	UPPER HSG SECTION	
003	51024792	1	EA	BLOWER MOUNT	
004	57284655	1	EA	BLOWER WHEEL 20”	
005	57063711	1	EA	HOUSING, BLOWER	
006	57284663	1	EA	BLOWER HSG	
007	57003782	1	EA	MOTOR, HYDRAULIC	*(See figure 197)*
008	57284671	1	EA	TIMER, DC ELECTRIC	
009	57284689	1	EA	MANIFOLD, AIR IMPULSE	
010	57284697	4	EA	ELEMENT, FILTER	
011	57063877	4	EA	ELEMENT,RETENTION	
012	56934185	4	EA	VALVE,IMPULSE	
013	57003790	4	EA	VALVE,SOLENOID	
014	57060154	1	EA	CHUTE,TRANSITION	
015	57446437	1	EA	HOSE, DROPOUT	
016	52230794	1	EA	CLAMP, HOSE	
017	57082455	1	EA	FILTER & REGULATOR	
	57082463	1	EA	● - ELEMENT, FILTER	
	57112963	1	EA	● - GAUGE, PRESSURE	
018	50829605	1	EA	VALVE, BALL – 1/2”	
019	57018673	1	EA	VALVE,SAFETY	
020	57284705	1	EA	VALVE, FLOW CONTROL	
021	57290264	1	EA	DOOR, FILTER ACCESS	
022	57116519	1	EA	BUSHING, MODIFIED	

57003782 MOTOR, HYDRAULIC

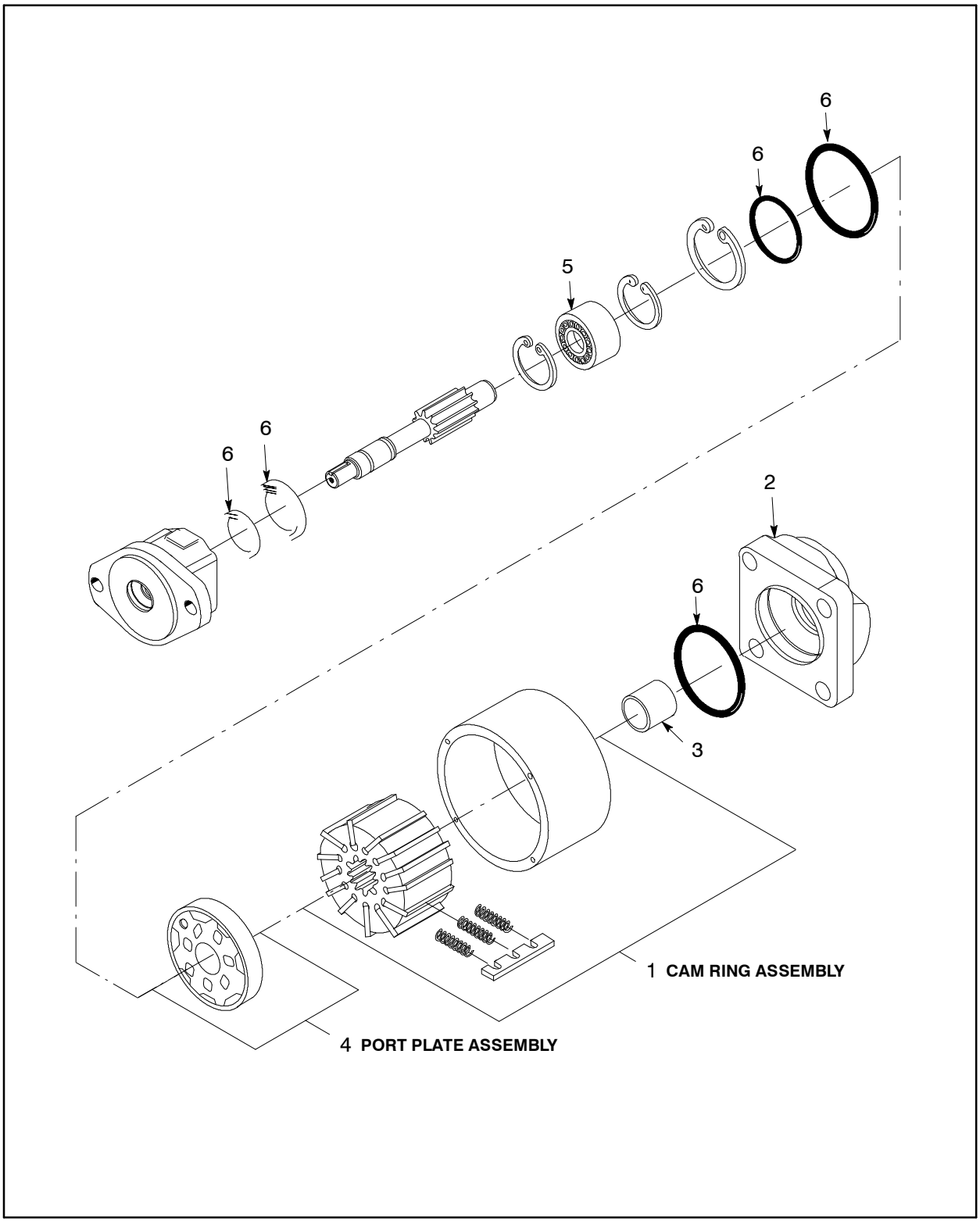

Figure 197 :MOTOR, HYDRAULIC
A57003782 REV00

WARNING: This manual contains data SPECIFIC to the drilling rig with serial number: 7341.

57003782 MOTOR, HYDRAULIC

REF.	PART NO.	QTY.	UNIT	DESCRIPTION
001	52233194	1	EA	CAM RING ASM
002	50709666	1	EA	END CAP
003	50815802	1	EA	BEARING, NEEDLE
004	52179488	1	EA	PLATE,PORT
005	52179504	1	EA	BEARING, BALL
006	56928484	1	EA	SEAL KIT

57474736 WATER INJ – 200 GALS, 8 GPM

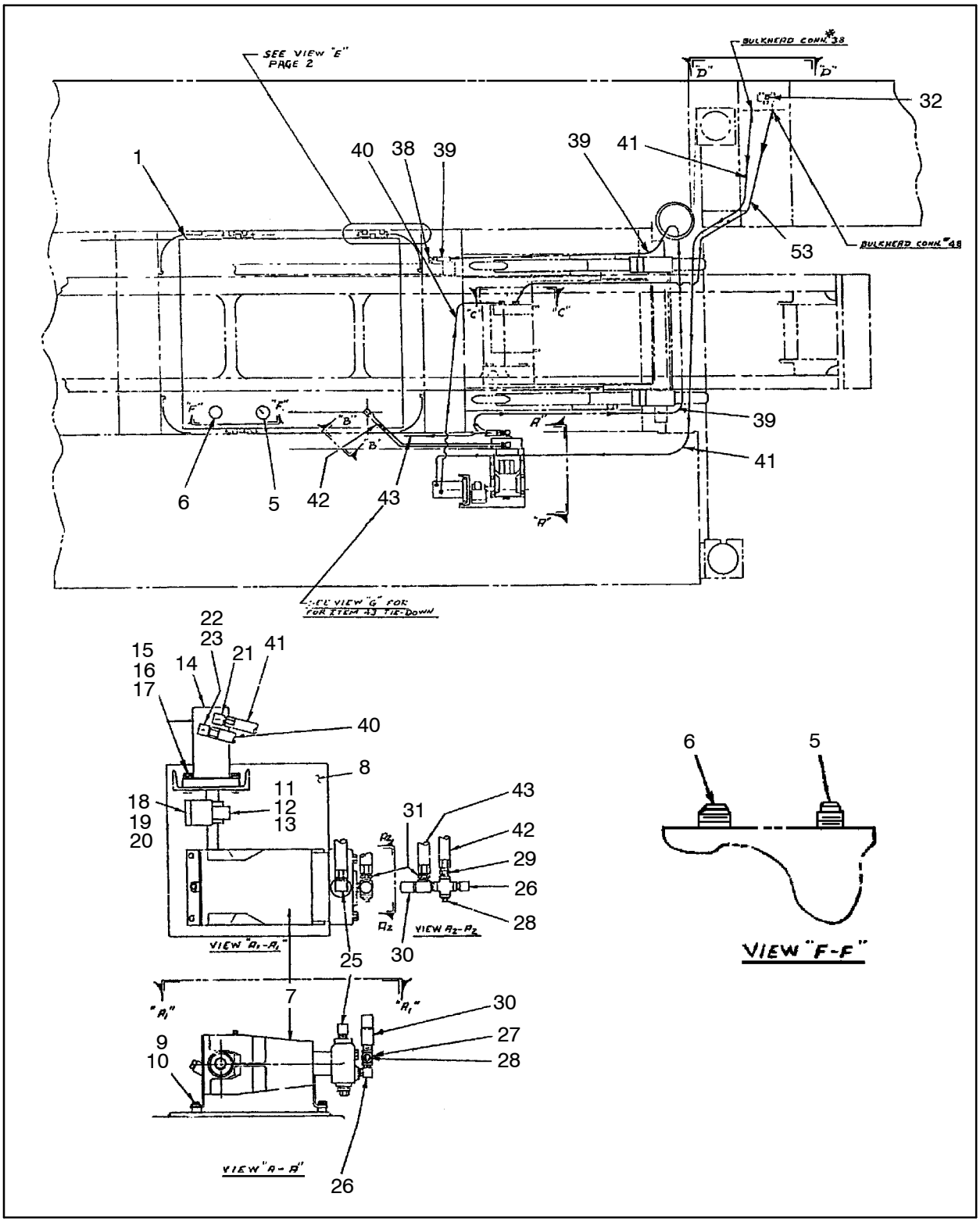

Figure 198 :WATER INJ – 200 GALS, 8 GPM
D57450108 REV 03

WARNING: This manual contains data SPECIFIC to the drilling rig with serial number: 7341.

57474736 WATER INJ – 200 GALS, 8 GPM

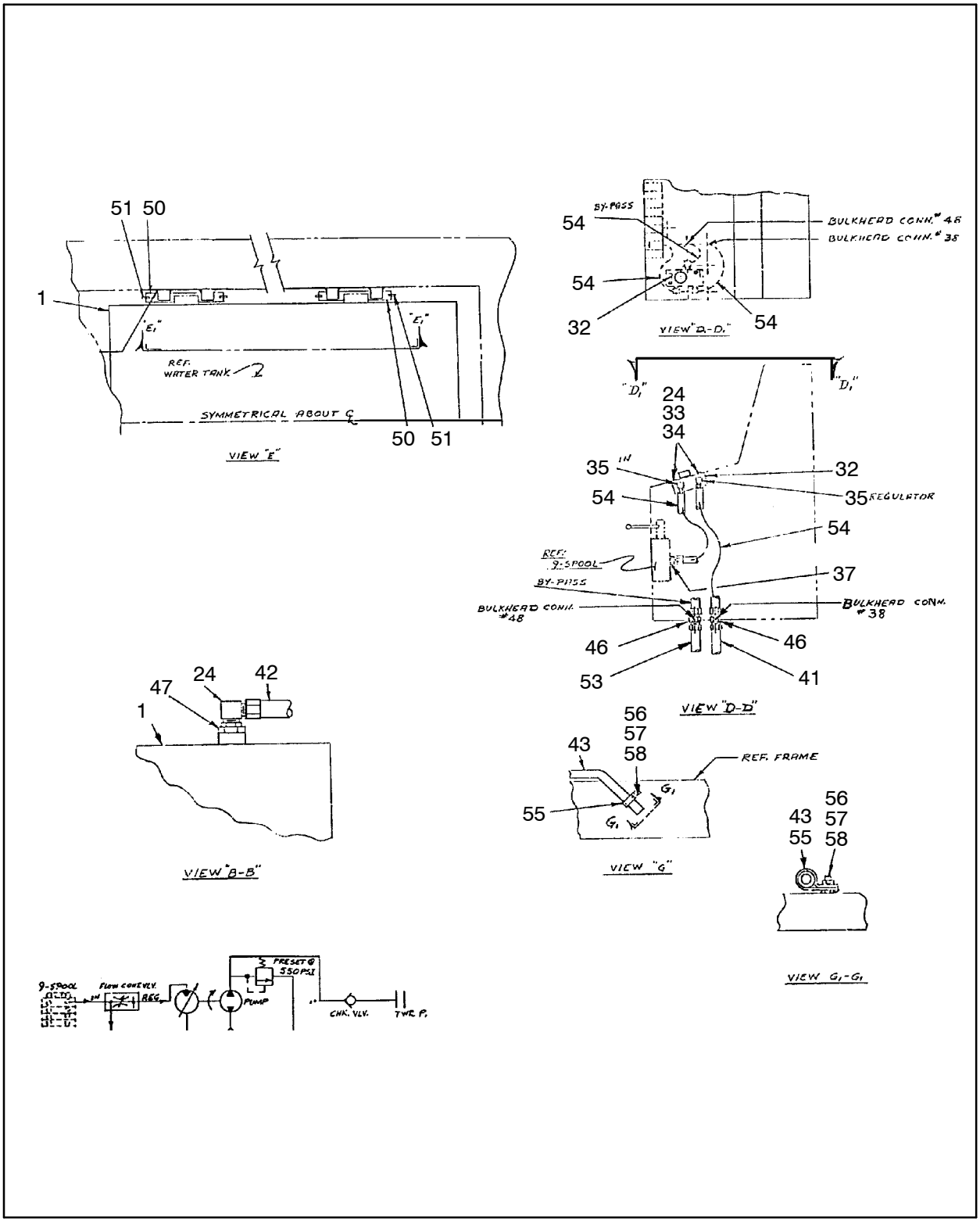

Figure 199 :WATER INJ – 200 GALS, 8 GPM
D57450108 REV 03

57474736 WATER INJ–200 GALS, 8 GPM

REF.	PART NO.	QTY.	UNIT	DESCRIPTION	
001	57474728	1	EA	TANK, WATER–200 GAL.	
005	50616762	1	EA	GAUGE, FUEL	
006	50067479	1	EA	CAP	
007	50822147	1	EA	PUMP, WATER–8 GPM	*(See figure 200)*
008	52153087	1	EA	BASE, WATER INJECTION	
009	95920674	4	EA	SCREW, CAP–3/8–16 X 1	
010	95937413	4	EA	WASHER, LOCK–3/8 PLATED	
011	50463868	1	EA	COUPLING ASM	
012	95279659	1	EA	KEY	
013	95268611	1	EA	KEY	
014	52235207	1	EA	MOTOR, HYDRAULIC	*(See figure 201)*
015	95104170	2	EA	SCREW, CAP–1/2–13 X 1–1/2	
016	95081824	2	EA	WASHER, LOCK–1/2	
017	95077798	2	EA	NUT, HEX–1/2–13	
018	52231107	1	EA	GUARD, COUPLING	
019	95067583	2	EA	SCREW, CAP–1/4–20 X 1/2	
020	95934766	4	EA	WASHER, LOCK–1/4 PLATED	
021	95303350	1	EA	ELBOW	
022	95529079	1	EA	FITTING, TUBE	
023	95381380	1	EA	FITTING, HYD	
024	95280194	1	EA	FITTING, HYD–90 JIC/ORING	
025	95219853	1	EA	FITTING, HYD	
026	95317434	1	EA	FITTING, HYD	
027	95364956	1	EA	FITTING, HYD	
028	95002143	1	EA	PLUG, PIPE–SQ HEAD, 3/4	
029	95219739	1	EA	FITTING, HYD	
030	52146883	1	EA	VALVE, RELIEF	
031	95219747	1	EA	FITTING, HYD	
032	50518984	1	EA	VALVE, FLOW CONTROL	
033	95958732	2	EA	SCREW,FLAT HD–1/4–20X3	
034	95931564	2	EA	NUT, HEX–1/4–20	
035	95279501	3	EA	FITTING, HYD	
036	95330692	2	EA	ADAPTER, 90DEG–O–RING/JIC	
037	95303368	1	EA	ADAPTER, STR–JIC/O–RING	
038	95338406	1	EA	FITTING, HYD	
042	56959919	1	EA	HOSE ASSY	
043	57451841	1	EA	HOSE ASSY	

WARNING: This manual contains data SPECIFIC to the drilling rig with serial number: 7341.

57474736 WATER INJ–200 GALS, 8 GPM

REF.	PART NO.	QTY.	UNIT	DESCRIPTION
044	56954167	3	EA	HOSE ASSY
046	95364964	2	EA	ADAPTER
047	57475873	1	EA	TUBE, SUCTION–FUEL
	95663803	1	EA	● - FITTING, TUBE
050	57474579	4	EA	PIN, SUPPORT–FUEL TANK
051	52266731	8	EA	PIN, COTTER
053	56969652	1	EA	HOSE ASSY
054	56954167	1	EA	HOSE ASSY
055	95301883	1	EA	CLAMP, HOSE
056	95920674	1	EA	SCREW, CAP–3/8–16 X 1
057	95937413	1	EA	WASHER, LOCK–3/8 PLATED
058	95922894	1	EA	NUT, HEX–3/8–16
061	95746194	1	EA	PLUG, ORING–SAE 32
062	95101044	1	EA	PLUG, PIPE–1” SQ HEAD
063	95249694	1	EA	PLUG, PIPE–2” SQ HEAD
064	57009193	16	EA	BAR, SQUARE

50822147 PUMP, WATER – 8 GPM

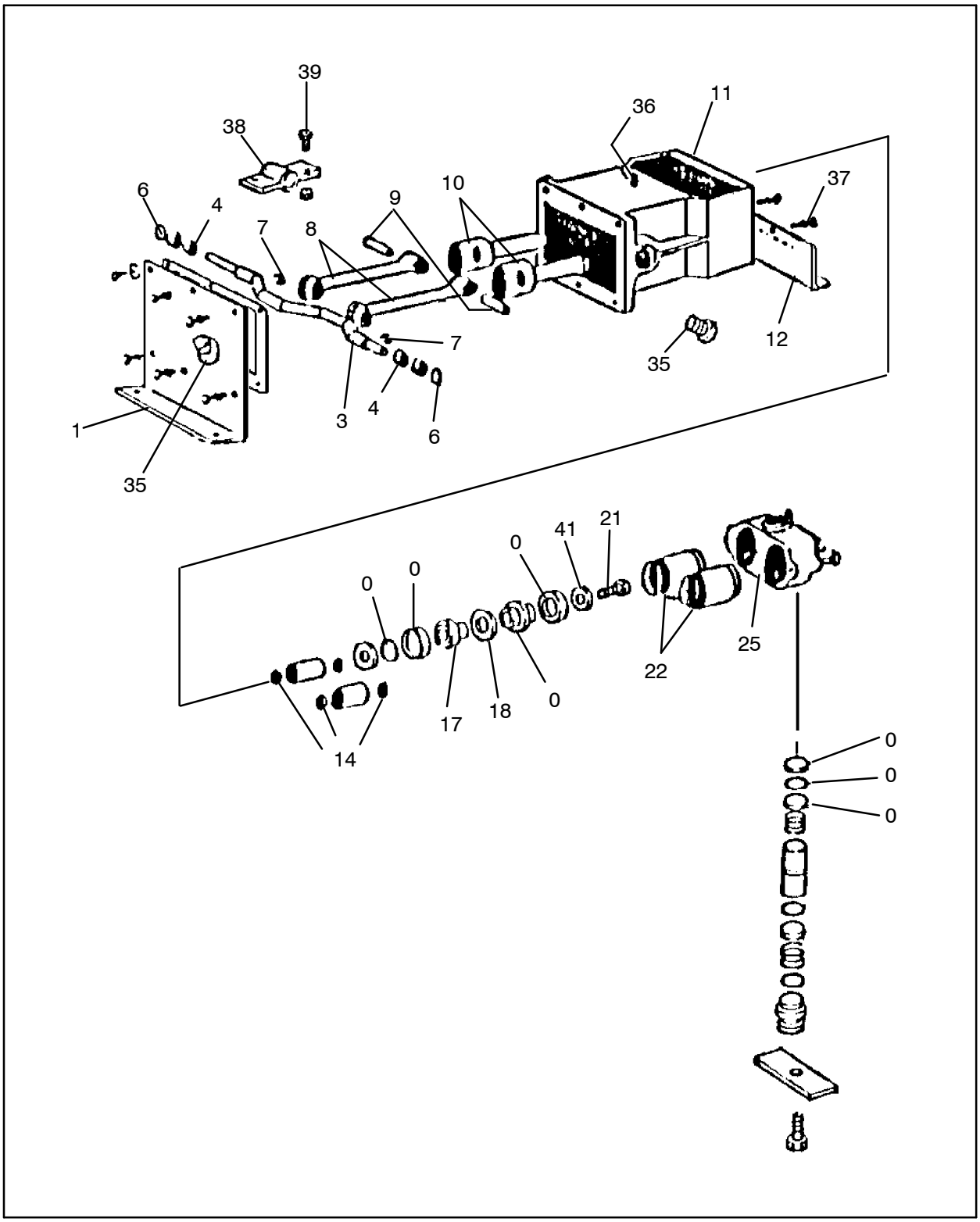

Figure 200 :PUMP, WATER – 8 GPM
V351380 REV 01

WARNING: This manual contains data SPECIFIC to the drilling rig with serial number: 7341.

50822147 PUMP, WATER – 8 GPM

REF.	PART NO.	QTY.	UNIT	DESCRIPTION
000	50822154	1	EA	KIT,REPAIR – VALVE
000	50822162	1	EA	KIT,REPAIR – PISTON
001	50717990	1	EA	REAR FOOT
003	50708890	1	EA	CRANKSHAFT
004	50717974	2	EA	BEARING,BALL
006	50717982	2	EA	RING, SNAP
007	50709013	4	EA	INSERT, BEARING
008	50718022	2	EA	ROD ASSY
009	50718030	2	EA	PIN,WRIST
010	50718048	2	EA	CROSSHEAD
011	50718055	1	EA	CASE
012	50718063	1	EA	FOOT, FRONT
014	50718089	4	EA	SEAL
017	52144318	2	EA	PACKING
018	52144326	2	EA	WASHER
021	50718105	2	EA	SCREW
022	50615871	2	EA	CYLINDER,WATER PUMP
025	52144276	2	EA	CHAMBER
035	50718162	2	EA	PLUG
036	50718170	1	EA	AIR VENT
037	50718188	2	EA	WASHER, LOCK
038	52144391	1	EA	SLINGER
039	52144409	1	EA	NUT, SPEED
041	52144425	2	EA	WASHER

52235207 MOTOR, HYDRAULIC

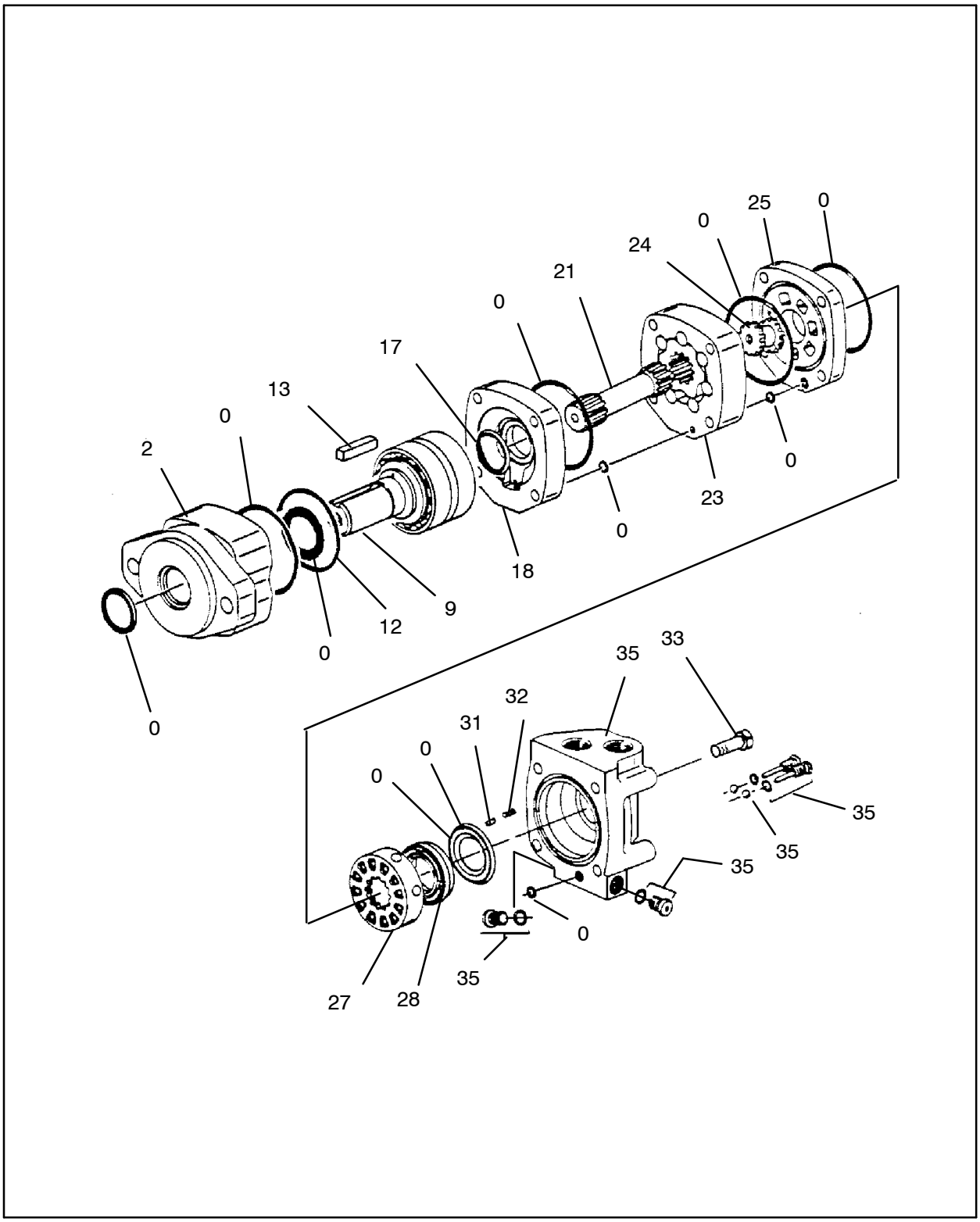

Figure 201 :MOTOR, HYDRAULIC
W357636 REV00

WARNING: This manual contains data SPECIFIC to the drilling rig with serial number: 7341.

52235207 MOTOR, HYDRAULIC

REF.	PART NO.	QTY.	UNIT	DESCRIPTION
000	59729707	1	EA	KIT, SEAL
002	50875368	1	EA	HOUSING, BEARING
009	52249869	1	EA	KIT, SHAFT AND BEARING
012	51375475	1	EA	KIT, SPACER BEARING
013	52249877	1	EA	KEY
018	50875426	1	EA	PLATE, WEAR
021	52249885	1	EA	DRIVE
023	57012478	1	EA	GEROLER
024	50907104	1	EA	DRIVE
025	50907112	1	EA	PLATE
027	50907120	1	EA	VALVE
028	50875491	1	EA	PLATE, BALANCE
031	50875525	2	EA	PIN
032	50875533	2	EA	SPRING
033	52249901	4	EA	BOLT
035	50961184	1	EA	HOUSING, VALVE
	50907146	1	EA	● - PLUG ASSEMBLY
	50907179	2	EA	● - PLUG ASSEMBLY, CHECK
	50806488	2	EA	● - BALL, STEEL

57244386 LUBE SYSTEM, FRAME & TRACK

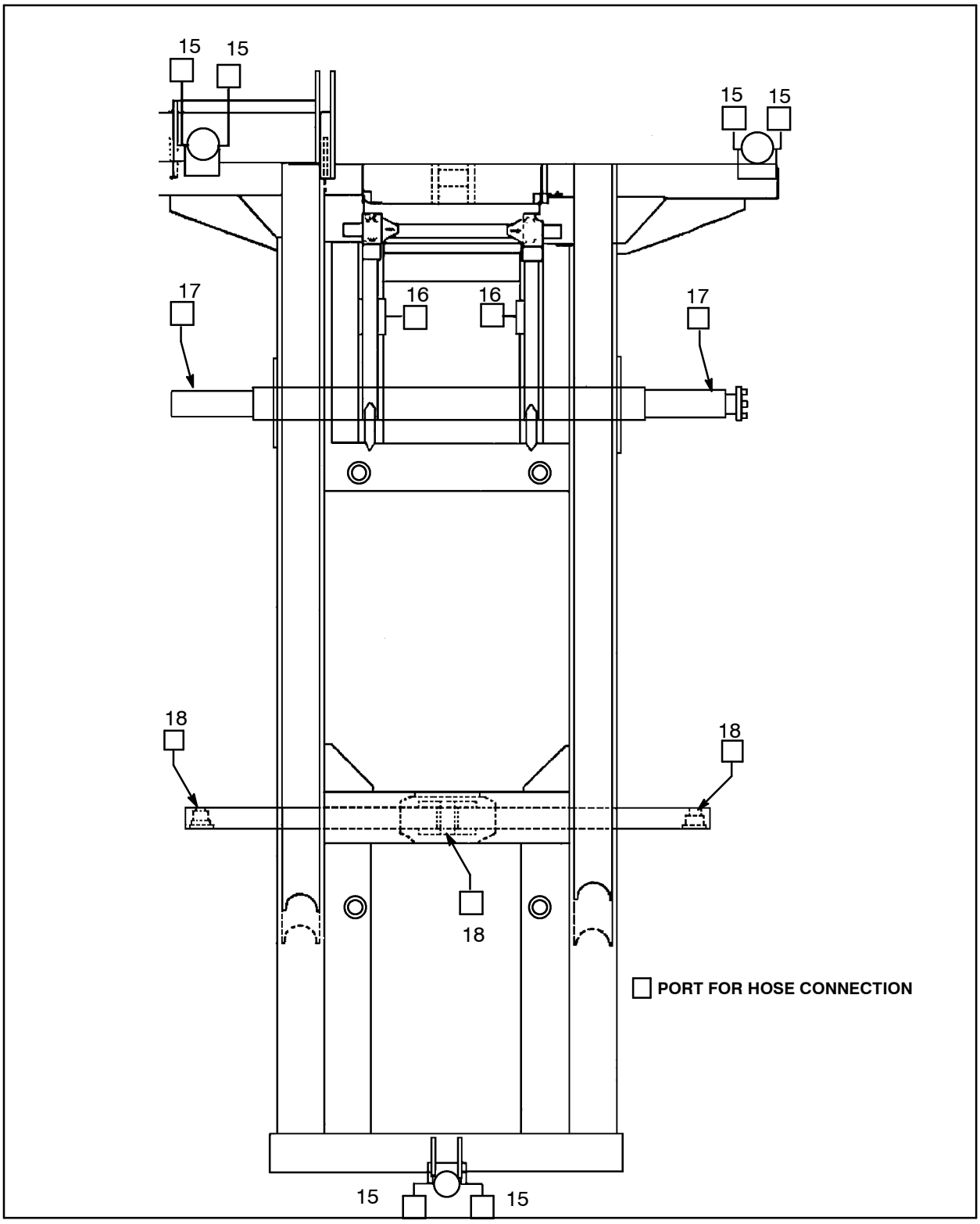

Figure 202 :LUBE SYSTEM, FRAME & TRACK
E57244386 REV 04

WARNING: This manual contains data SPECIFIC to the drilling rig with serial number: 7341.

57244386 LUBE SYSTEM, FRAME & TRACK

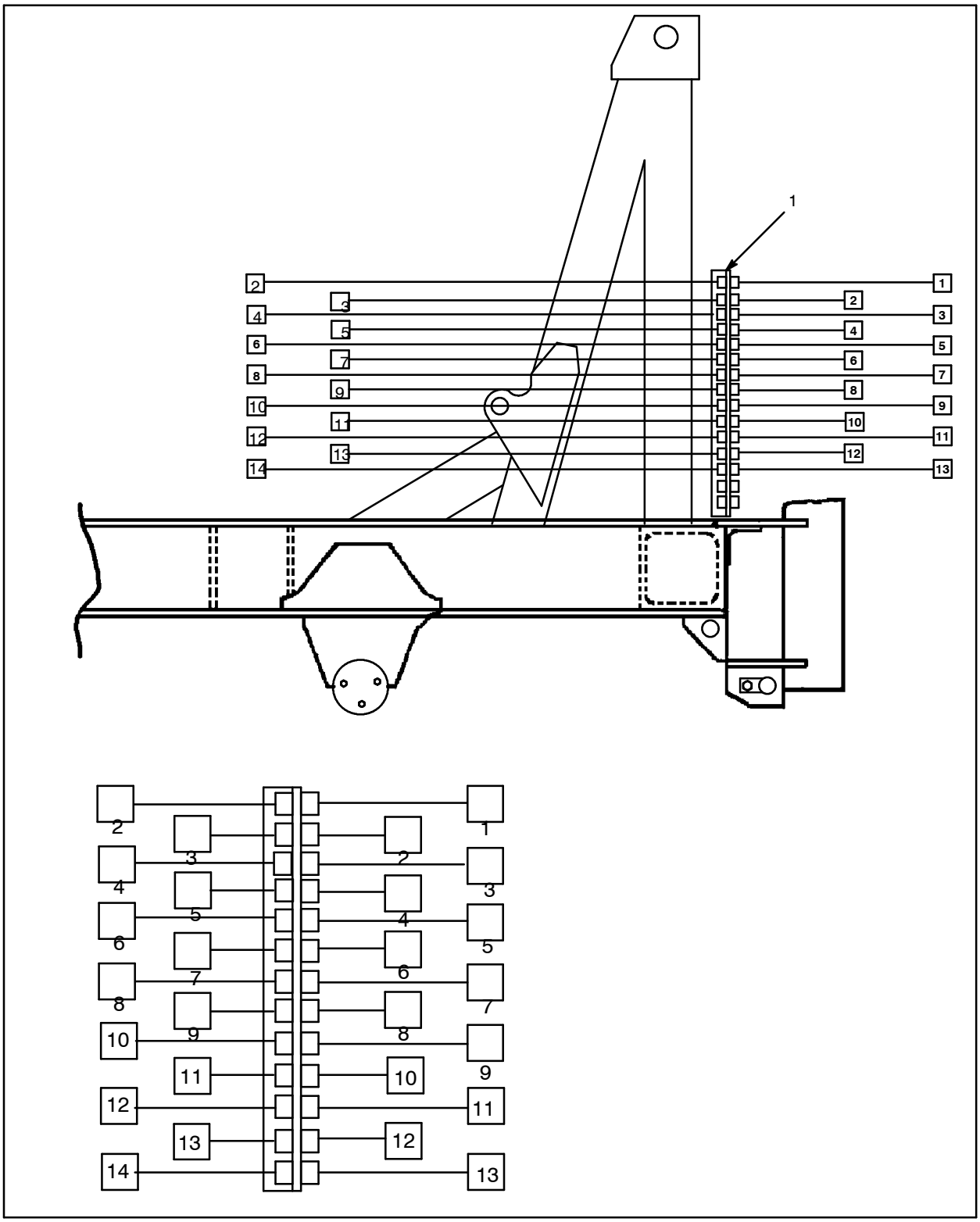

Figure 203 :LUBE SYSTEM, FRAME & TRACK
E57244386 REV 04

57244386 LUBE SYSTEM, FRAME & TRACK

REF.	PART NO.	QTY.	UNIT	DESCRIPTION
001	57244444	1	EA	BRACKET
002	52226461	1	EA	HOSE ASSY
003	57043218	1	EA	HOSE ASSY
004	57343675	1	EA	HOSE ASSY
005	56973621	1	EA	HOSE ASSY
006	56973621	1	EA	HOSE ASSY
007	52226453	1	EA	HOSE ASSY
008	57043218	2	EA	HOSE ASSY
009	56964281	2	EA	HOSE ASSY
010	57005696	1	EA	HOSE ASSY
011	57005696	1	EA	HOSE ASSY
012	57044752	1	EA	HOSE ASSY
013	56972714	1	EA	HOSE ASSY
014	56972714	1	EA	HOSE ASSY
015	95209086	6	EA	FITTING, HYD
016	95302170	2	EA	FITTING, HYD
017	95209086	4	EA	FITTING, HYD
018	95209086	3	EA	FITTING, HYD
019	57536856	1	EA	DECAL–GREASE,M/F,DMC
020	95301859	5	EA	CLAMP, HOSE
021	95934550	5	EA	SCREW,CAP–3/8–16 X 3/4
022	95937413	5	EA	WASHER, LOCK–3/8 PLATED
023	95922894	5	EA	NUT, HEX–3/8–16

WARNING: This manual contains data SPECIFIC to the drilling rig with serial number: 7341.

57244386 LUBE SYSTEM, FRAME & TRACK

This page is blank.

57481509 LUBE, INJECTION – DHD,60 GAL

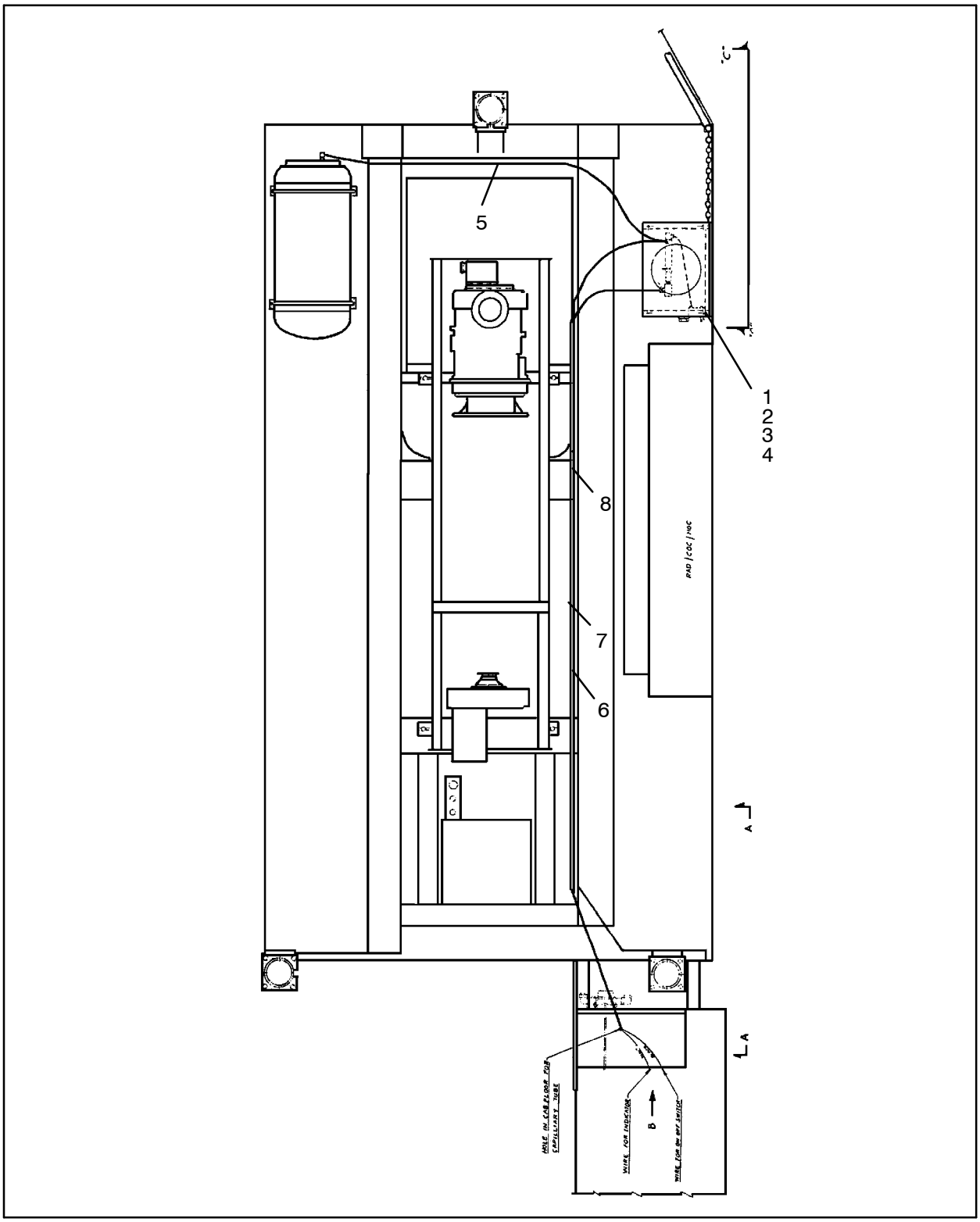

Figure 204 :LUBE, INJECTION – DHD,60 GAL
E57481509 REV 02

WARNING: This manual contains data SPECIFIC to the drilling rig with serial number: 7341.

57481509 LUBE, INJECTION – DHD,60 GAL

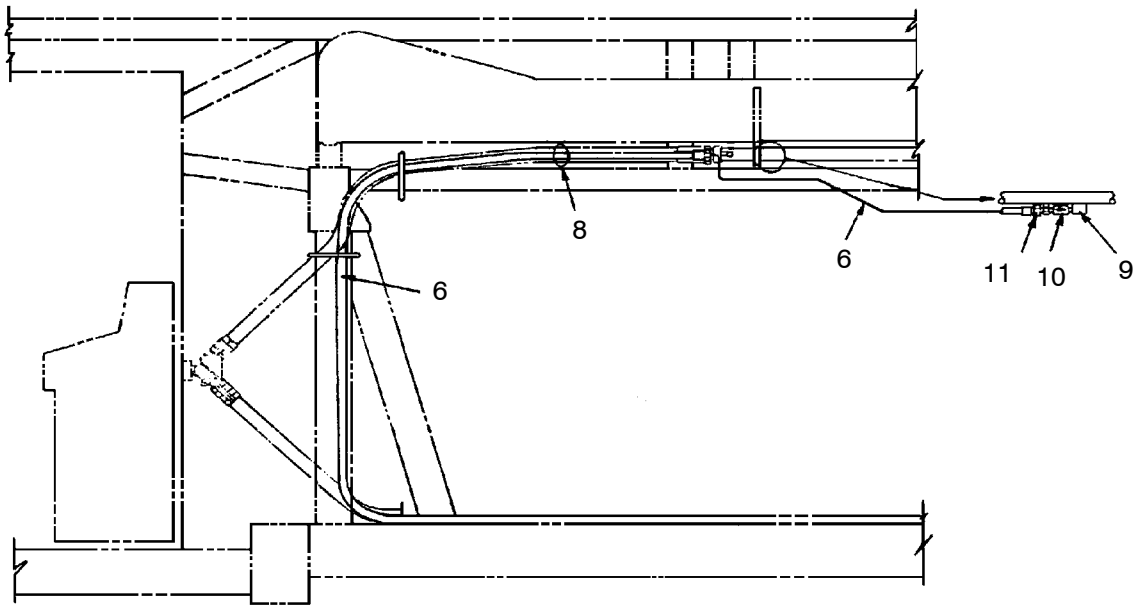

VIEW – A

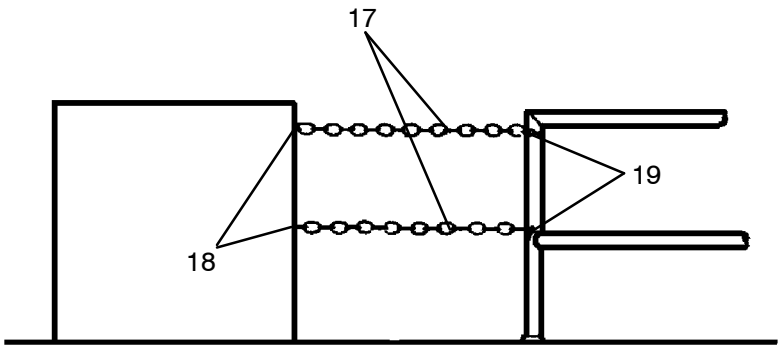

VIEW – C

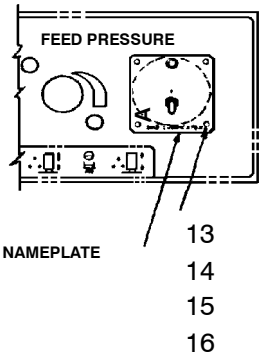

VIEW – B

Figure 205 :LUBE, INJECTION – DHD,60 GAL
E57481509 REV 02

57481509 LUBE, INJECTION–DHD,60 GAL

REF.	PART NO.	QTY.	UNIT	DESCRIPTION
001	57354755	1	AS	LUBRICATOR ASSM–60GL DHD* *(See figure 206)*
002	95053047	4	EA	SCREW, CAP–HEX1/2–13X1.25
003	95081824	4	EA	WASHER, LOCK–1/2
004	95077798	4	EA	NUT, HEX–1/2–13
005	57496150	1	EA	HOSE ASSY
006	57148199	1	AS	HOSE ASSY
007	56933690	300.00	IN	WIRE ELEC
008	58078718	8	EA	TIE, CABLE
009	95364469	1	EA	FITTING, HYD
010	57081077	1	EA	VALVE, CHECK
011	95338372	1	EA	FITTING, HYD
013	95922092	4	EA	SCREW, ROUNDHD–8–32X3/4
014	95064663	4	EA	WASHER, FLAT–NO. 8
015	95922555	4	EA	WASHER, LOCK–NO. 8
016	95076725	4	EA	NUT, MACHINE–HEX,NO.8–32
017	50699321	84.00	IN	CHAIN, BULK–3/16 COIL
018	56801053	2	EA	LINK
019	56957012	2	EA	SNAP,SWIVEL

57481509 LUBE, INJECTION – DHD,60 GAL

This page is blank.

57354755 LUBRICATOR ASSEMBLY – 60 GAL DHD

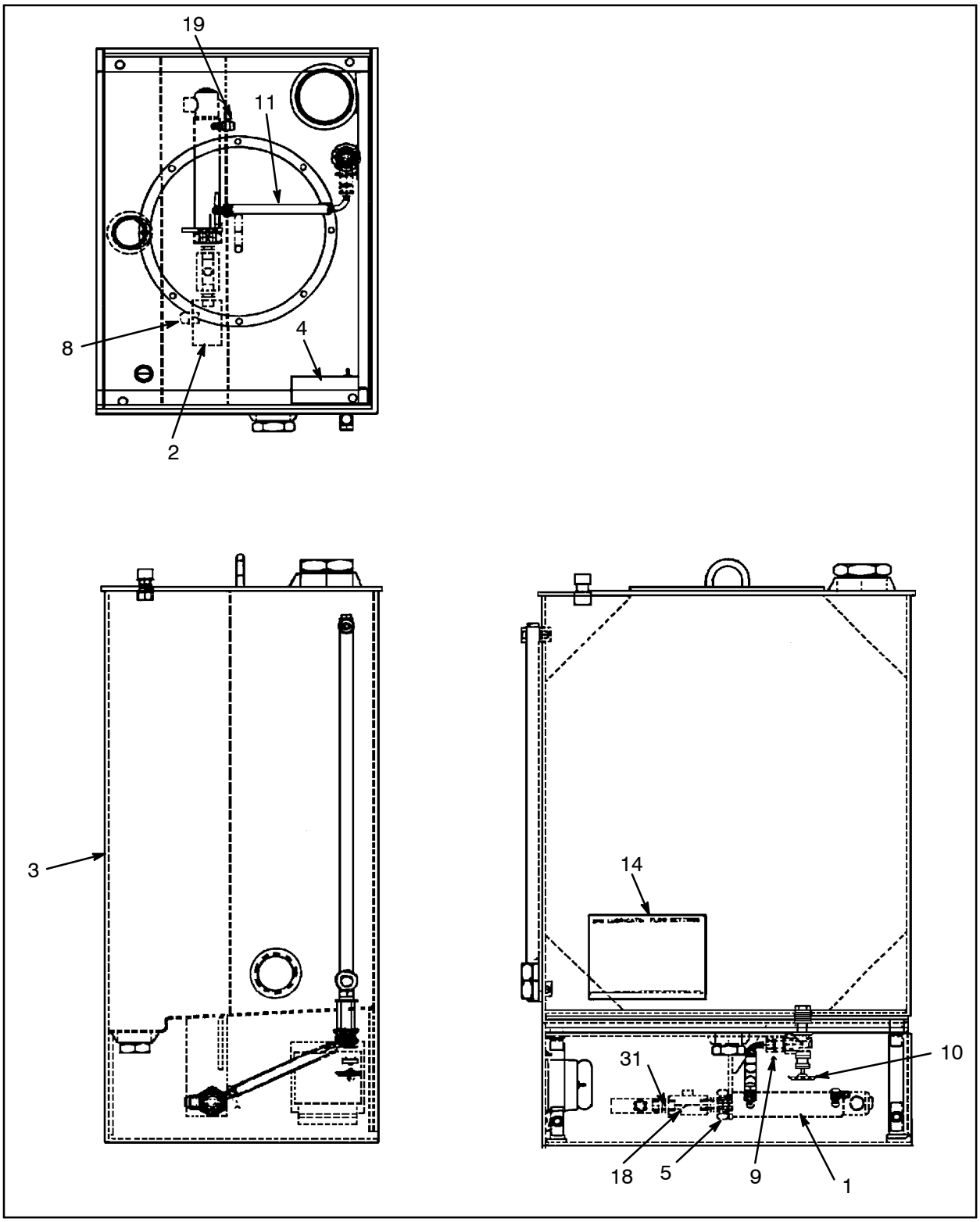

Figure 206 :LUBRICATOR ASSEMBLY – 60 GAL DHD
E57354755 REV 002

57354755 LUBRICATOR ASSEMBLY – 60 GAL DHD

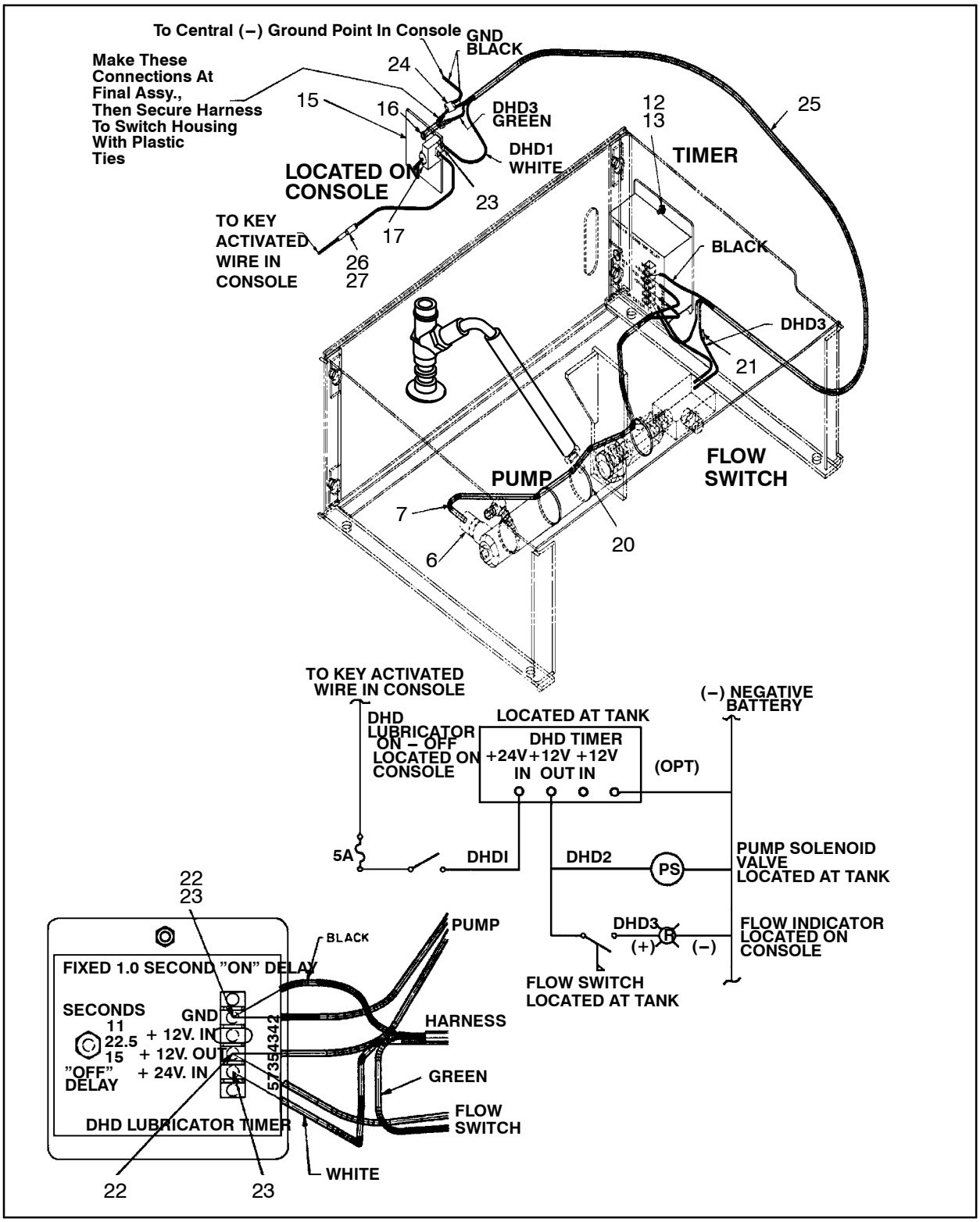

Figure 207 :LUBRICATOR ASSEMBLY – 60 GAL DHD
E57354755 REV 002

57354755 LUBRICATOR ASSEMBLY–60 GAL DHD

REF.	PART NO.	QTY.	UNIT	DESCRIPTION	
001	57352973	1	EA	PUMP, DHD LUBRICATOR	
	57307886	1	EA	● - SEAL KIT,PUMP	
	57431223	1	EA	● - PLUNGER, TEFLON	
002	57353021	1	EA	SWITCH, FLUID FLOW	
	57428914	1	EA	● - SWITCH, SPST REED	
003	57354094	1	EA	TANK, DHD LUBE–60 GAL.	*(See figure 208)*
004	57354342	1	EA	TIMER, DHD LUBRICATOR	
005	95315404	1	EA	NUT, HEX JAM–1–1/4–12	
006	50625946	1	EA	CONNECTOR	
007	57358830	16.00	IN	CONDUIT, 3/8" NYLON	
008	95303368	1	EA	ADAPTER, STR–JIC/O–RING	
009	95219739	1	EA	FITTING, HYD	
010	95072971	1	EA	VALVE	
011	57481186	1	EA	HOSE ASSY	
012	95209003	1	EA	NUT, MACHINE–#10–32	
013	95207478	1	EA	WASHER, LOCK–NO.10 INT.	
014	57361982	1	EA	DECAL,DHD LUBE SETTINGS	
015	57361990	1	EA	NAMEPLATE, DHD CONTROL	
016	57297137	1	EA	LIGHT, LED INDICATOR	
017	57179608	1	EA	SWITCH, SPST/ON–OFF	
018	57408775	1	EA	VALVE, CHECK	
018	95209870	1	EA	O–RING	
019	95293403	1	EA	FITTING, HYD	
020	95748802	6	EA	TIE, CABLE	
021	95239216	1	EA	JOINT, WIRE	
022	95843371	3	EA	TERMINAL	
023	95329249	4	EA	TERMINAL	
024	855017P0841–1	1	EA	CONNECTOR, TAP TYPE	
025	56933690	480.00	IN	WIRE ELEC	
026	57130577	1	EA	HOLDER, FUSE	
027	52279338	1	EA	FUSE	
030	57168916	1.00	OZ	VARNISH, INSULATING	(NOT SHOWN)
031	57408767	1	EA	ADAPTER, SAE 8 STRAIGHT	

WARNING: This manual contains data SPECIFIC to the drilling rig with serial number: 7341.

57354755 LUBRICATOR ASSEMBLY–60 GAL DHD

This page is blank.

57354094 TANK, DHD LUBE–60 GAL.

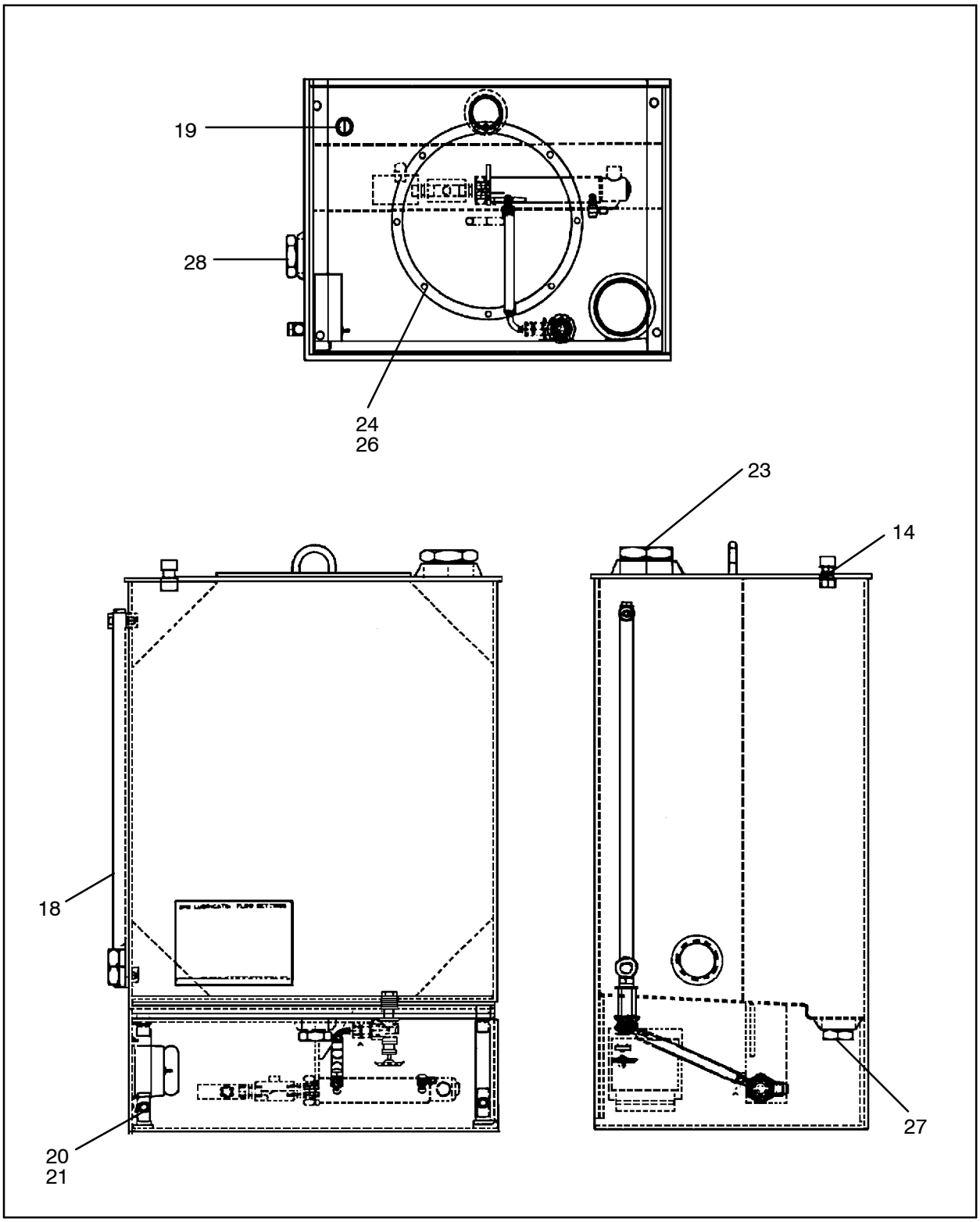

Figure 208 :TANK, DHD LUBE–60 GAL.
D57354094 REV001

57354094 TANK, DHD LUBE–60 GAL.

REF.	PART NO.	QTY.	UNIT	DESCRIPTION
014	50819200	1	EA	GASKET, TOP
018	57363657	1	EA	GAUGE, FLUID LEVEL–26”
019	56799125	1	EA	VENT, FILTER
020	95934550	2	EA	SCREW, CAP–3/8–16 X 3/4
021	95937413	2	EA	WASHER, LOCK–3/8 PLATED
023	57408346	1	EA	PLUG, PIPE–3” RUBBER
024	95928982	8	EA	SCREW, CAP–1/4–20 X 3/4
026	95934766	8	EA	WASHER, LOCK–1/4 PLATED
027	57408353	1	EA	PLUG, MAGNETIC 1” NPT
028	95437349	1	EA	PLUG, PIPE–2” HEX HEAD

57523482 LUBE, TWR–25'DMC,MANIFOLD

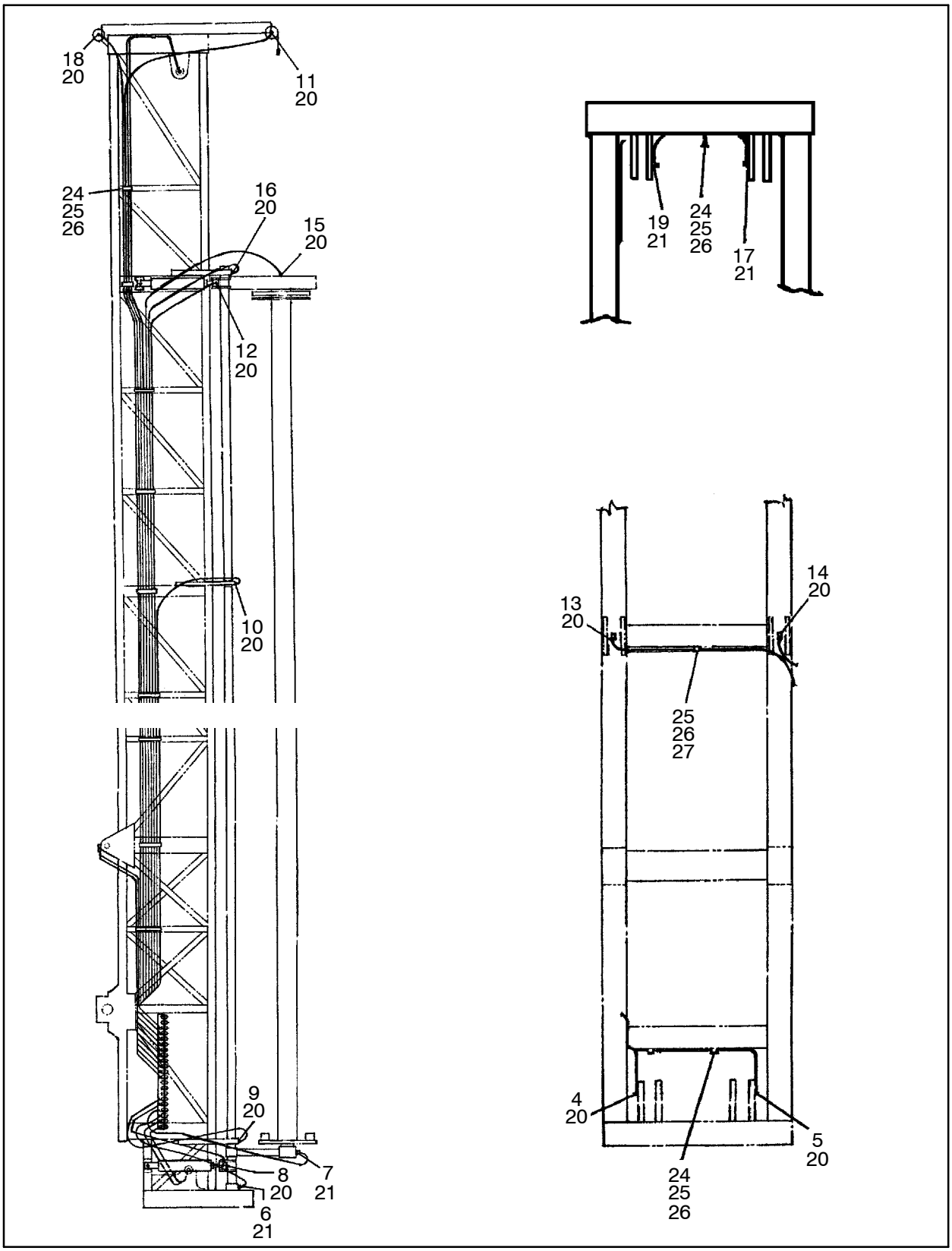

Figure 209 :LUBE, TWR–25'DMC,MANIFOLD
E57523482

WARNING: This manual contains data SPECIFIC to the drilling rig with serial number: 7341.

57523482 LUBE, TWR – 25'DMC,MANIFOLD

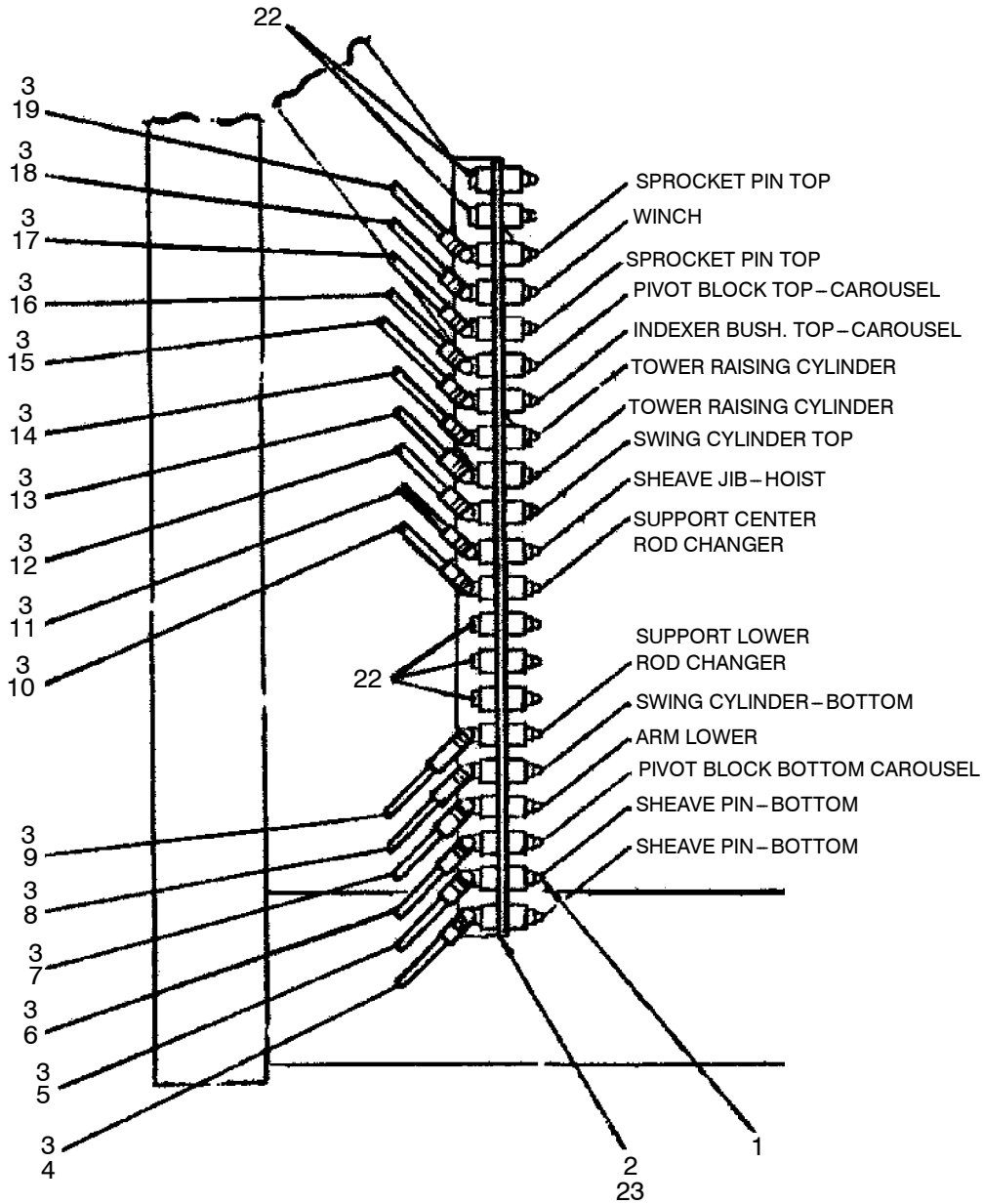

Figure 210 :LUBE, TWR – 25'DMC,MANIFOLD
E57523482

57523482 LUBE, TWR–25'DMC,MANIFOLD

REF.	PART NO.	QTY.	UNIT	DESCRIPTION
001	95208989	21	EA	FITTING, LUBE
002	57216582	1	EA	BRACKET, GREASE FITTING
003	95302170	18	EA	FITTING, HYD
004	57020729	1	EA	HOSE ASSY
005	52255270	1	EA	HOSE ASSY
006	58146622	1	EA	HOSE ASSY
007	56973621	1	EA	HOSE ASSY
008	52226453	1	EA	HOSE ASSY
009	56964224	1	EA	HOSE ASSY
010	57235590	1	EA	HOSE ASSY
011	57055055	1	EA	HOSE ASSY
012	56964372	1	EA	HOSE ASSY
013	56964307	1	EA	HOSE ASSY
014	56972698	1	EA	HOSE ASSY
015	57096505	1	EA	HOSE ASSY
016	57100224	1	EA	HOSE ASSY
017	56242605	1	EA	HOSE ASSY
018	56242613	1	EA	HOSE ASSY
019	56242597	1	EA	HOSE ASSY
020	95209086	12	EA	FITTING, HYD
021	95287629	4	EA	FITTING, HYD
022	95267068	5	EA	PLUG, PIPE–1/8 SQ HEAD
023	57536864	1	EA	DECAL–GREASE,DMC TOWERS
024	50034826	14	EA	CLAMP, HOSE
025	95931564	20	EA	NUT, HEX–1/4–20
026	95934766	20	EA	WASHER, LOCK–1/4 PLATED
027	50034818	6	EA	CLAMP, HALF

WARNING: This manual contains data SPECIFIC to the drilling rig with serial number: 7341.

57523482 LUBE, TWR−25'DMC,MANIFOLD

This page is blank.

57532749 DC ANGLE/TELESCOPIC ASSEMBLY

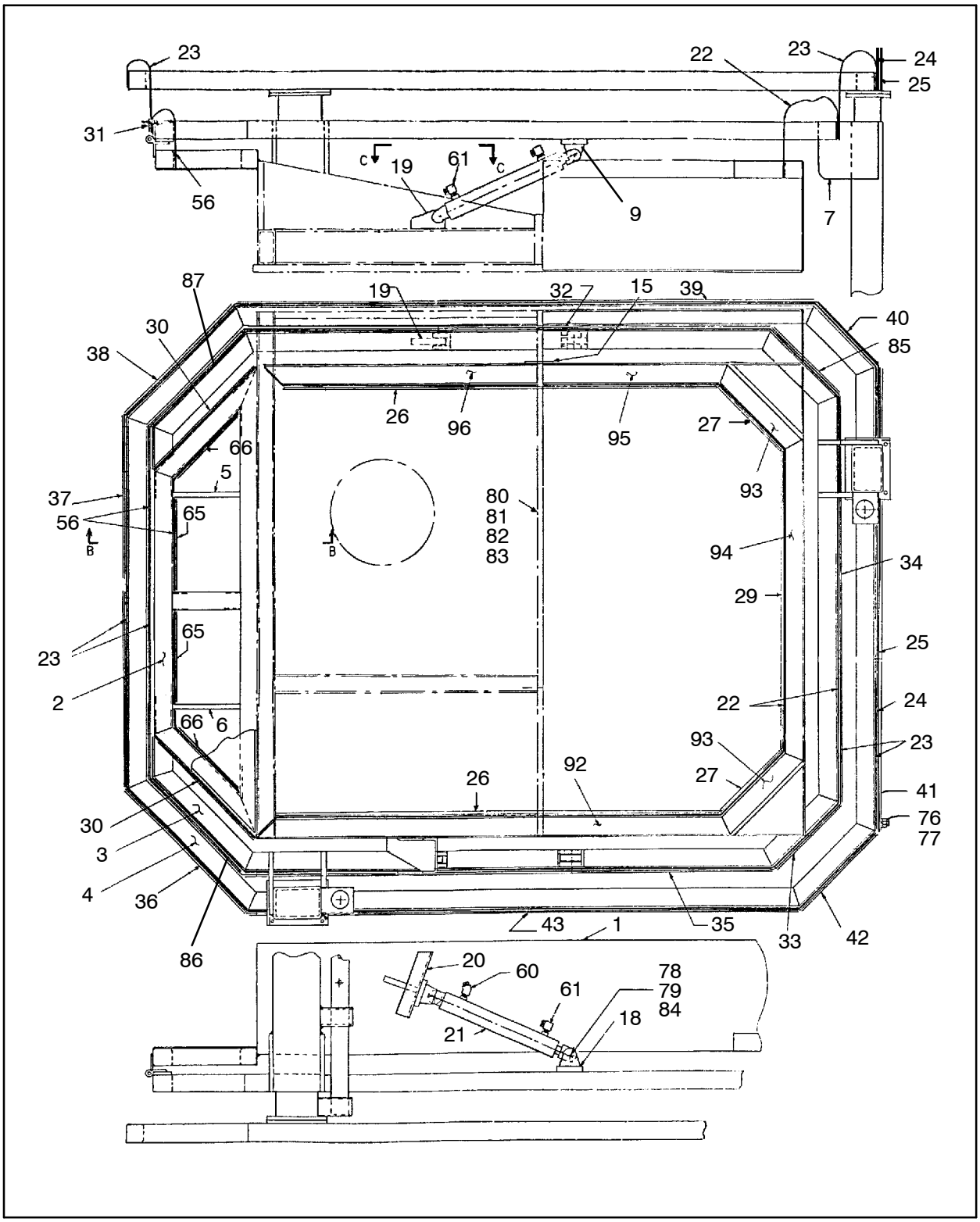

Figure 211 :DC ANGLE/TELESCOPIC ASSEMBLY
E57532749 REV 01

WARNING: This manual contains data SPECIFIC to the drilling rig with serial number: 7341.

57532749 DC ANGLE/TELESCOPIC ASSEMBLY

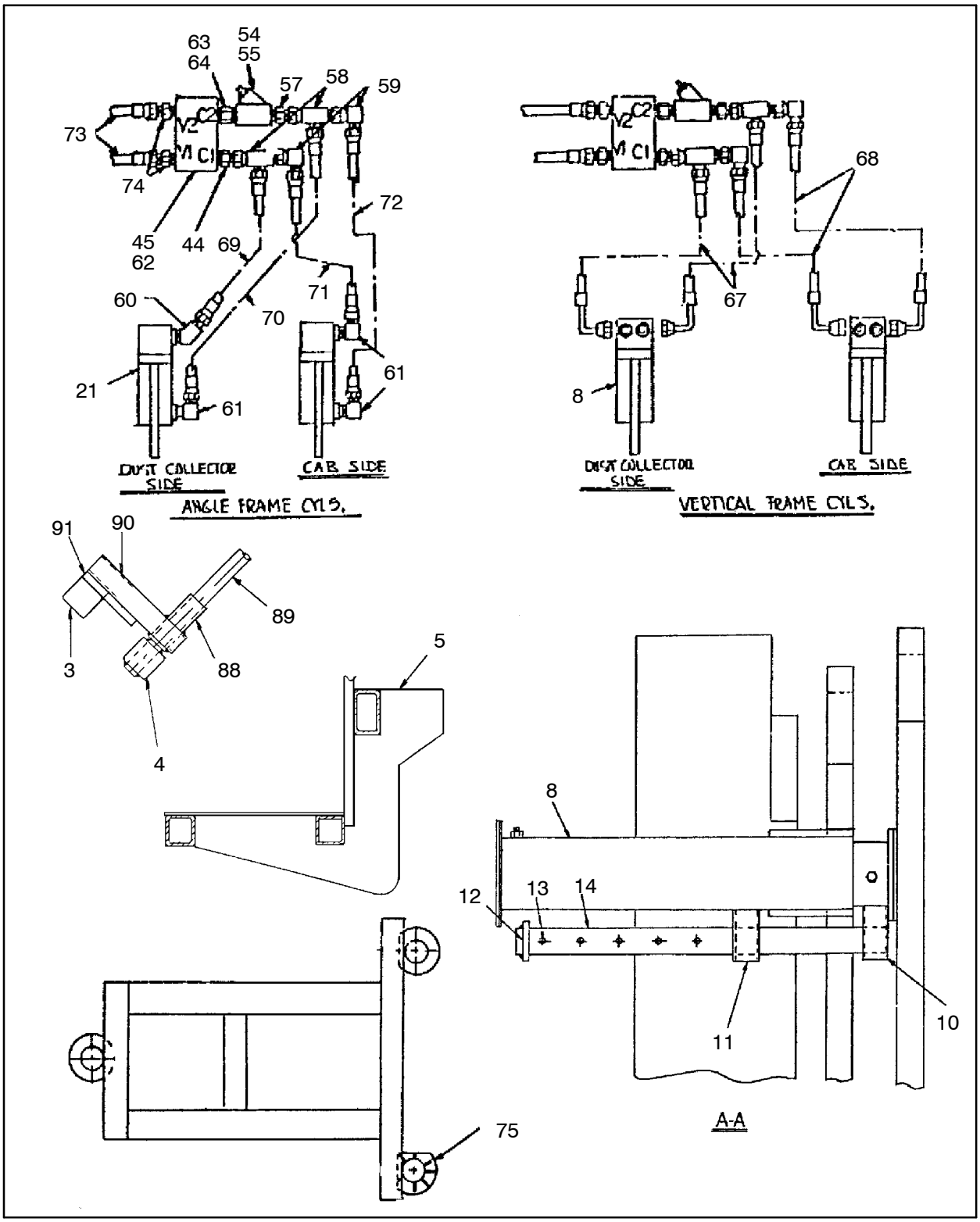

Figure 212 :DC ANGLE/TELESCOPIC ASSEMBLY
E57532749 REV 01

57532749 DC ANGLE/TELESCOPIC ASSEMBLY

REF.	PART NO.	QTY.	UNIT	DESCRIPTION
001	57532731	1	EA	PLATFORM,DC–ANGLE/TELESC.
002	57497315	1	EA	FRAME, REAR–WELDMENT
003	57505513	1	EA	ANGLE FRAME ASSY
004	57505570	1	EA	ANGLE FRAME ASSY, BOTTOM
005	57498610	1	EA	GUSSET,BOTTOM–RIGHT
006	57498628	1	EA	GUSSET,BOTTOM–LEFT
007	57505745	4	EA	GUSSET
008	57505208	2	EA	JACK ASSY
009	57505687	1	EA	CLEVIS
010	57523060	2	EA	SUPPORT, PIPE
011	57495236	2	EA	GUIDE
012	57495228	2	EA	STOP PLATE
013	56887268	2	EA	PIN
014	57495616	2	EA	PIPE
015	57495202	1	EA	PLATE, CONNECTION
018	57499667	2	EA	CLEVIS
019	57509135	1	EA	CLEVIS
020	57499691	1	EA	CHANNEL BRACKET
021	57407967	2	EA	CYLINDER, HYDRAULIC
	57103814	1	EA	● - SEAL KIT
022	57505851	1	EA	CURTAIN, DUST ANGLE
023	57505869	1	EA	CURTAIN, VERT.EXTENDABLE
024	57505877	1	EA	CURTAIN, BOTTOM
025	57505885	1	EA	CURTAIN FLAPPER, BOTTOM
026	57500746	2	EA	STRAP
027	57500753	2	EA	STRAP
029	57500761	1	EA	STRAP
030	57495574	2	EA	STRAP
031	57499758	1	EA	STRAP
032	57505695	1	EA	STRAP
033	57499774	1	EA	STRAP
034	57499782	1	EA	STRAP
035	57498933	1	EA	STRAP
036	57505729	1	EA	STRAP
037	57498958	1	EA	STRAP
038	57495574	1	EA	STRAP
039	57498966	1	EA	STRAP

WARNING: This manual contains data SPECIFIC to the drilling rig with serial number: 7341.

57532749 DC ANGLE/TELESCOPIC ASSEMBLY

REF.	PART NO.	QTY.	UNIT	DESCRIPTION	
040	57498974	1	EA	STRAP	
041	57498982	1	EA	STRAP	
042	57498990	1	EA	STRAP	
043	57499006	1	EA	STRAP	
044	57499907	2	EA	FITTING, ORIFICE 1/16	
045	50462944	2	EA	VALVE, CHECK–DBL PILOT OP	
050	57204729	1	AS	VALVE, 3 SPOOL–INSTL	*(See figure 128)*
051	57493512	1	AS	VALVE ASSY–4 SPOOL	(NOT SHOWN)
052	57490591	1	EA	DECAL, FRONT PANEL–DRILL	(NOT SHOWN)
	57448110	0	EA	● - PLATE,TOP–CONTROL PANEL	
053	57492761	1	EA	NAMEPLATE–SPOOL FN,ANGLE	(NOT SHOWN)
054	57484206	2	EA	BODY, VALVE–INLINE, AL.	
055	57484198	2	EA	CARTRIDGE, FLOW CONTROL	
056	57505893	1	EA	CURTAIN, HINGE	
057	57500803	2	EA	ADAPTER	
058	95473443	4	EA	FITTING, HYD	
059	95302113	4	EA	FITTING, HYD	
060	95279055	1	EA	FITTING, HYD	
061	95293403	3	EA	FITTING, HYD	
062	57054991	2	EA	BAR, TAPPED	
063	95303376	2	EA	ADAPTER,STR–8–10S JIC/ORG	
064	95209888	2	EA	O–RING, HYD	
065	57500878	2	EA	STRAP	
066	57500886	2	EA	STRAP	
067	57437139	2	AS	HOSE ASSY	
068	97118251	2	EA	HOSE ASSEMBLY	
069	58170440	1	EA	HOSE ASSY	
070	56973621	1	EA	HOSE ASSY	
071	56966211	1	EA	HOSE ASSY	
072	56972698	1	EA	HOSE ASSY	
073	57345324	4	EA	HOSE ASSY	
074	95356903	4	EA	FITTING, HYD	
075	57501421	1	EA	FOOT PIECE–HYD JACK	
076	95937413	146	EA	WASHER, LOCK–3/8 PLATED	
077	95922894	146	EA	NUT, HEX–3/8–16	
078	57504250	4	EA	SCREW, 1/2" DRILLED	
079	95080180	4	EA	NUT, HEX LOCK–1/2–13	

57532749 DC ANGLE/TELESCOPIC ASSEMBLY

REF.	PART NO.	QTY.	UNIT	DESCRIPTION
080	95081659	7	EA	WASHER,FLAT–7/8
081	95043162	7	EA	WASHER, LOCK–7/8
082	95035473	7	EA	SCREW,CAP–HEX,7/8–9X2–1/2
083	95210480	7	EA	NUT,HEX–7/8–9
084	95002697	4	EA	PIN, COTTER–1/8 X 1–1/4
085	57505703	1	EA	STRAP
086	57495525	1	EA	STRAP
087	57505711	1	EA	STRAP
088	57505760	1	EA	PIPE, BUSHING
089	57505778	1	EA	PIPE, GUIDE
090	57505786	1	EA	GUIDE SUPPORT
091	57505794	1	EA	SPACER
092	57531345	1	EA	TUBING ASSY
093	57531352	2	EA	TUBING ASSY
094	57531360	1	EA	TUBING ASSY
095	57531378	1	EA	TUBING ASSY
096	57531386	1	EA	TUBING ASSY

WARNING: This manual contains data SPECIFIC to the drilling rig with serial number: 7341.

57532749 DC ANGLE/TELESCOPIC ASSEMBLY

This page is blank.

50622604 SEAL,ROD−4.5 IN ROD

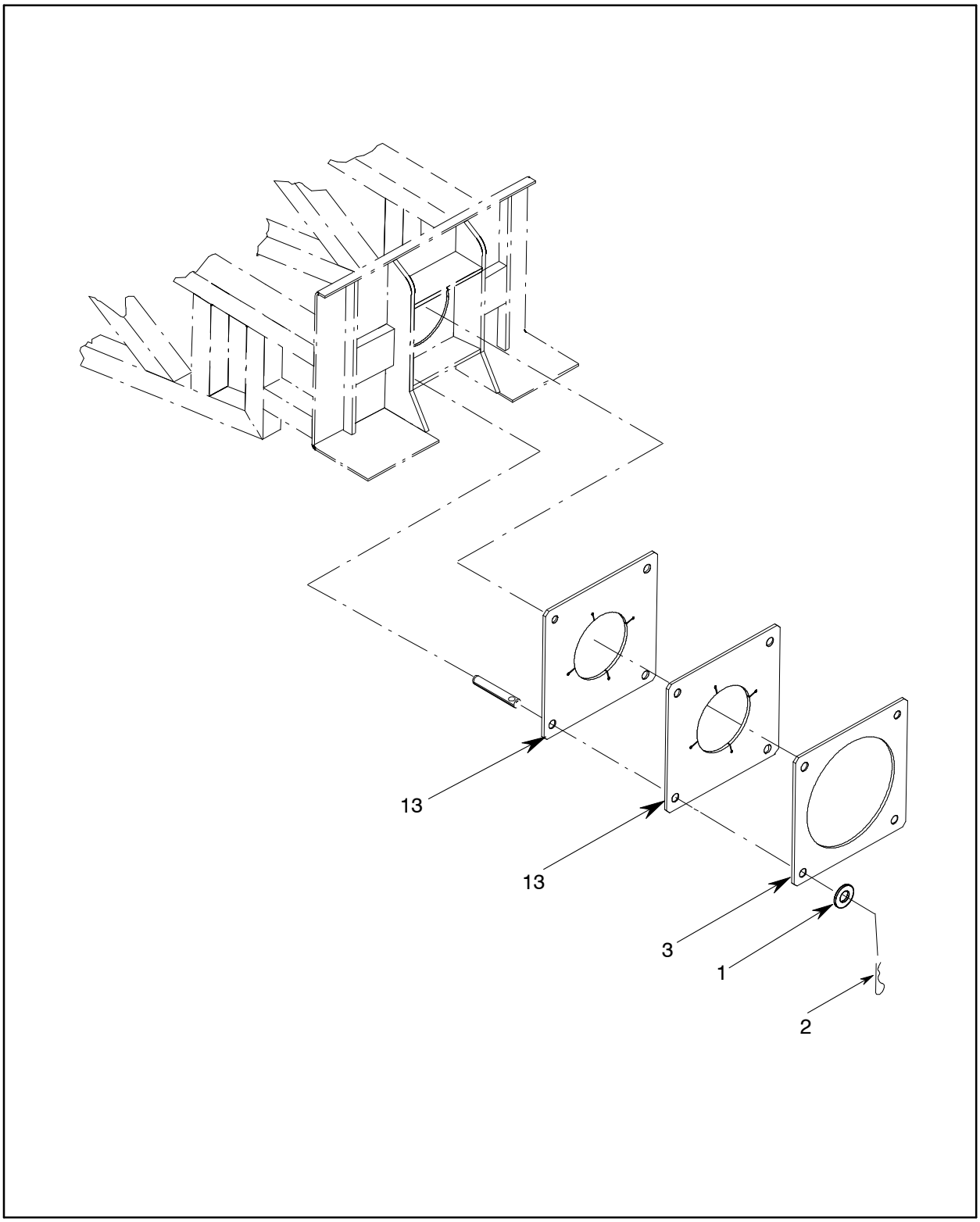

Figure 213 :SEAL,ROD−4.5 IN ROD
C50622596 REV02

WARNING: This manual contains data SPECIFIC to the drilling rig with serial number: 7341.

50622604 SEAL,ROD–4.5 IN ROD

REF.	PART NO.	QTY.	UNIT	DESCRIPTION
001	95200093	4	EA	WASHER,FLAT–3/4
002	95433819	4	EA	CLIP
003	50453729	1	EA	HOLDER–ROD SEAL
013	50516970	2	EA	ROD SEAL–4.5”

57328205 FILTER KIT, FIELD REPLACE

FILTER KIT

TP: 57328205

List only, no drawing required.

Figure 214 :FILTER KIT, FIELD REPLACE
LIST

57328205 FILTER KIT, FIELD REPLACE

REF.	PART NO.	QTY.	UNIT	DESCRIPTION
001	52263183	2	EA	ELEMENT,FLTR–MAIN HYD
002	50343490	1	EA	ELEMENT,FLTR–3 MICRON
003	52214178	1	EA	ELEMENT,FLTR–3 MICRON
004	36860336	2	EA	ELEMENT, OIL FILTER

57059370 DECALS, COMMONS *

DECALS, COMMONS

TP: 57059370

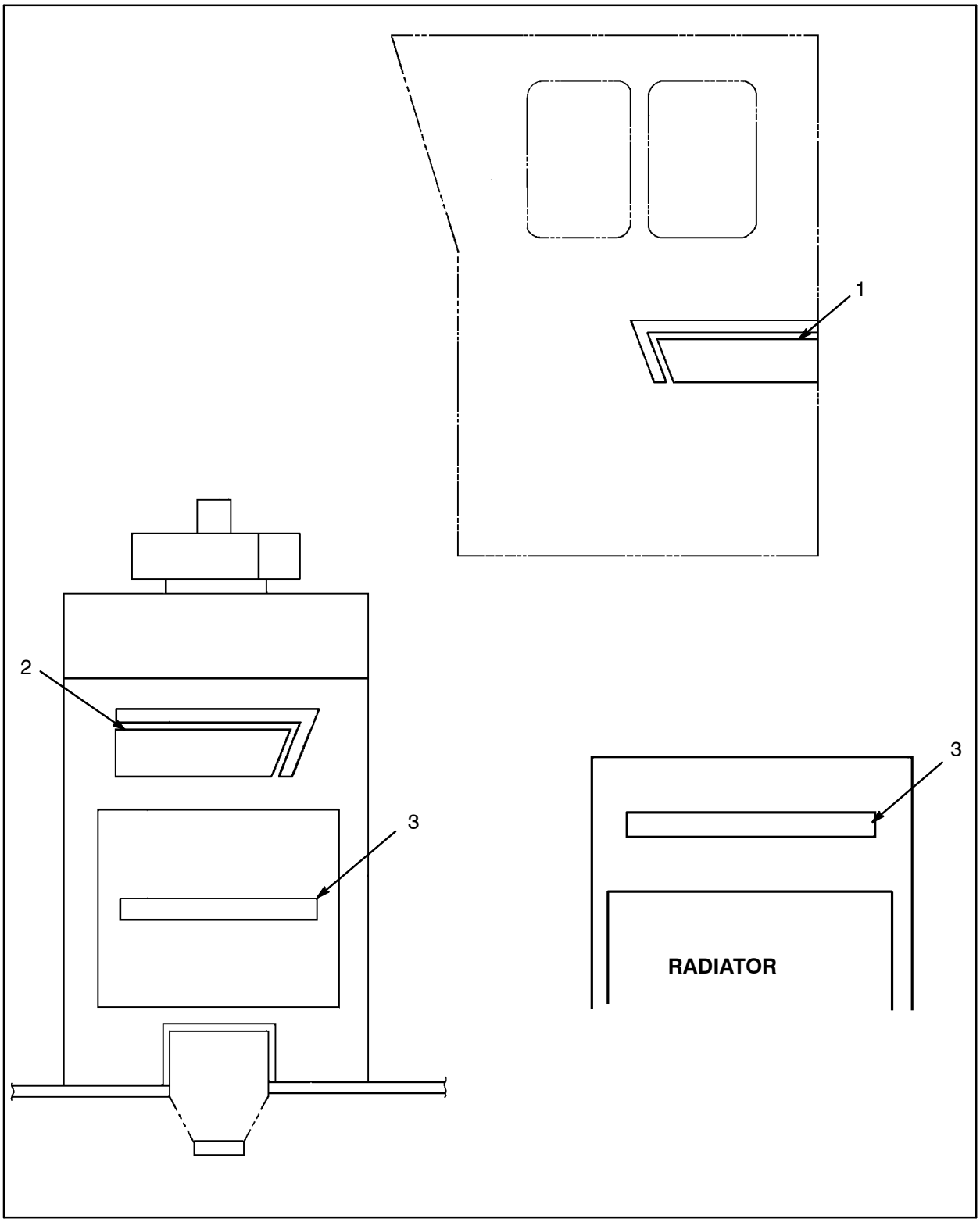

Figure 215 :DECALS, COMMONS *
E57059370 REV02

WARNING: This manual contains data SPECIFIC to the drilling rig with serial number: 7341.

57059370 DECALS, COMMONS *

REF.	PART NO.	QTY.	UNIT	DESCRIPTION
001	57095887	1	EA	DECAL,MACHINE
002	57093460	1	EA	DECAL,MACHINE
003	57497927	1	EA	DECAL,CORPORATE NAMEPLATE
004	57362360	1	EA	DECAL,IR LOGO–RED(NOT SHOWN)
005	57362378	2	EA	DECAL,IR LOGO–RED(NOT SHOWN

57490575 NAMEPLATES, ENGLISH

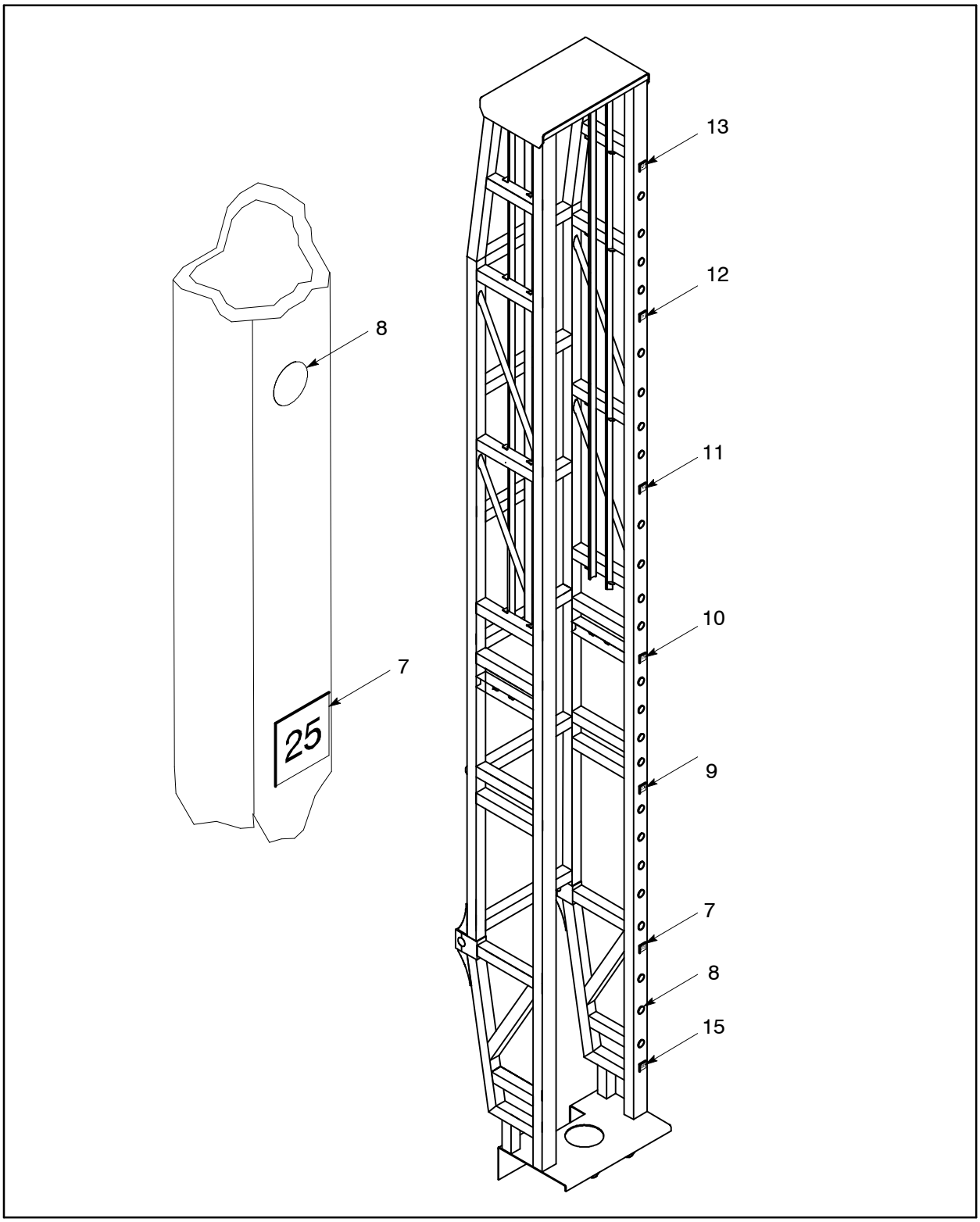

Figure 216 :NAMEPLATES, ENGLISH
E57132649 REV 15

57490575 NAMEPLATES, ENGLISH

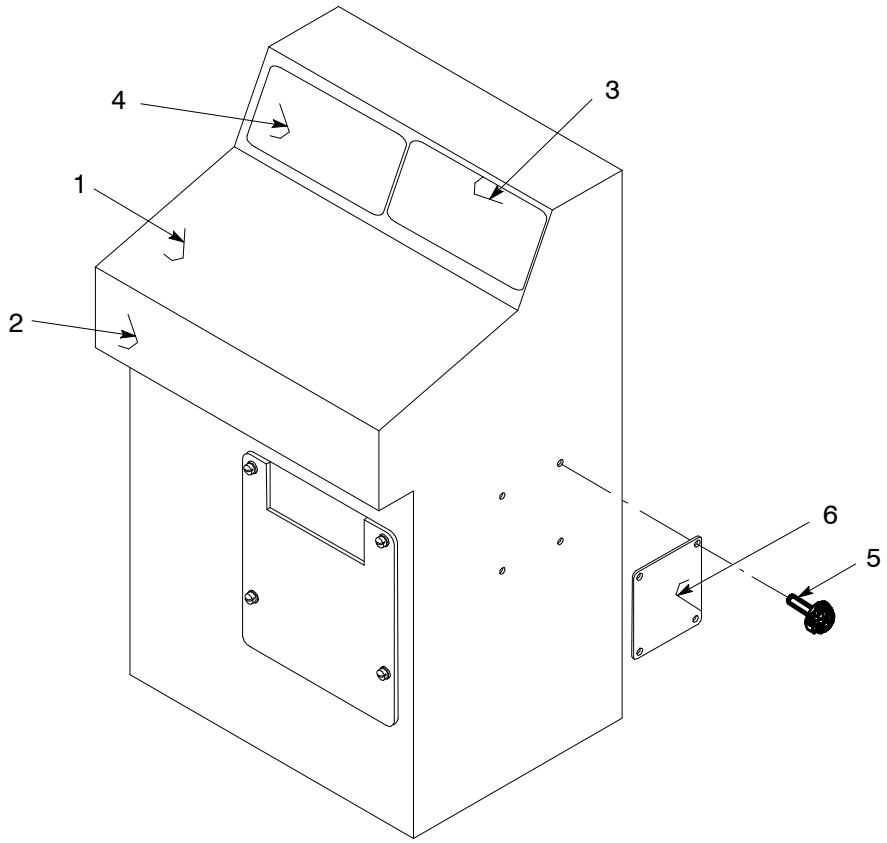

Figure 217 :NAMEPLATES, ENGLISH
E57132649 REV 15

57490575 NAMEPLATES, ENGLISH

REF.	PART NO.	QTY.	UNIT	DESCRIPTION
001	57490583	1	EA	DECAL,LWRPANEL–DRILL/TRAM
	57448110	0	EA	● - PLATE,TOP–CONTROL PANEL
002	57490591	1	EA	DECAL, FRONT PANEL–DRILL
	57448110	0	EA	● - PLATE,TOP–CONTROL PANEL
003	57533911	1	EA	DECAL, UPPER PANEL–ENGINE
	57534018	0	EA	● - PANEL, ELECTRICAL–UPPER
004	57490609	1	EA	DECAL, UPPER PANEL–DRILL
	57448110	0	EA	● - PLATE,TOP–CONTROL PANEL
004	57392417	1	EA	NAMEPLATE,ENGINE THROTTLE
006	57497687	1	EA	NAMEPLATE, MODEL I.D.
007	57233181	1	EA	NAMEPLATE,25’ INDICATOR
008	57233124	24	EA	NAMEPLATE,DEPTH INDICATOR
009	57233173	1	EA	NAMEPLATE,20’ INDICATOR
010	57233165	1	EA	NAMEPLATE,15’ INDICATOR
011	57233157	1	EA	NAMEPLATE,10’ INDICATOR
012	57233140	1	EA	NAMEPLATE,5’ INDICATOR
013	57233132	1	EA	NAMEPLATE,O’ INDICATOR
015	57233199	1	EA	NAMEPLATE,30’ INDICATOR
016	57511859	1	EA	NAMEPLATE–FILTER

WARNING: This manual contains data SPECIFIC to the drilling rig with serial number: 7341.

Index

Numbers

2–WAY AIR VL, 52158714, 216

A

ACTUATOR, CONTROL CABLE, 57396061, 199

ADAPTER
- 50516624, 174
- 50710532, 130
- 57072423, 237
- 57137663, 352
- 57267528, 112
- 57500803, 398
- 95650156, 90, 315
- CHAIN, 57407017, 140
- DRILL ROD, 57032872, 116
- GENERIC JACK–LONG, 57116758, 300
- GENERIC JACK–SHRT, 57116766, 300
- INPUT, 50597640, 234
- MIDDLE–4.5”RODS, 50415256, 102
- MOTOR, 57368052, 88
- PUMP D, 50597632, 234
- PUMP SUCTION–QSK, 57491995, 164
- SAE, 52209913, 315
- SAE 8 STRAIGHT, 57408767, 387
- SAE B, 59572917, 234
- SAE C, 50597624, 234
- STR.–JIC/O–RING, 95371241, 242
- STR–8–10S JIC/ORG, 95303376, 398
- TEE, 57491441, 224
- UPPER–4.5”RODS, 50415454, 102

ADDITIVE, SERVICE COOLANT, 57499170, 148

ADHESIVE
- 56784267, 113, 153
- 57441354, 50

AIR CLEANER, 59302752, 60

AIR VENT, 50718170, 374

AIREND–1050HR2.5, 36020519, 186

ALARM
- BACKUP–12 TO 36VD, 57366387, 351
- DIRTY FILTER, 50815646, 296

ALARM KIT, BACKUP, 57366395, 351

ALTERATION INSTRUCTION, 57197410, 224

ANGLE
- 56790330, 355
- 57014672, 351
- 57090763, 164
- 57499196, 310
- MOUNTING–CHECK VLV, 57481483, 310

ANGLE FRAME ASSY
- 57505513, 397
- BOTTOM, 57505570, 397

ANGLE–FUEL COOLER MTG, 57481541, 174

ARM
- ADJUSTABLE, 57194987, 120, 331
- JIB HOIST–FIXED, 57120271, 128
- LEVER, 57098428, 204
- ROD SUPPORT, 57423816, 120

ARM ASSY, SEAT, 57096968, 54

ARM COMPLETE–LOWER, 57406084, 106

ARM COMPLETE–UPPER, 57406027, 106

ATOMIZER–STARTING FLUID, 57301863, 184

B

B–PLUG, 6 CIPR, 57480402, 230

BALL
- 52141751, 276
- 52141769, 276
- 52249646, 306
- STEEL, 50806488, 376

BAND
- 50266832, 158
- MOUNTING, 57331894, 60

BAR
- CABLE ANCHOR, 57406969, 199
- COPPER, 57036881, 352
- FLAT
  - 56901853, 10
  - 57003634, 128
  - 57083206, 106
  - 57106536, 107
- ROUND, 57093197, 314
- SLIDING, 57090953, 44
- SQ., 57100125, 200
- SQUARE, 56998164, 112
- TAPPED, 57054991, 326, 398

BAR FLAT
- 1X3.50X15.50, 57389694, 335
- 1X3.50X8.00, 57412439, 107
- 3/8 X 3 X 14.75, 57389686, 335

BASE
- FAB–SLIDING BRKOUT, 57443939, 99

INDEX

Index

WATER INJECTION, 52153087, 371

BATTERY, 12V–8DW/ELECTROL, 57113177, 156

BEARING
52209939, 89
95200663, 234
95214037, 88
95434874, 88
95758595, 112
BALL
50717974, 374
52179504, 368
58194945, 112
LOWER, 57405987, 106
MOTOR, 56001118, 134
NEEDLE, 50815802, 368
ROLLER
95434551, 88
95434569, 88
SPHERICAL ROLLER, 95711156, 88
THRUST, 50458959, 106

BEARING ASSY, 50243518, 106

BEARING CONE, 50710490, 131

BEARING CUP, 50710508, 130

BEARING–FRAME IDLER, 57356750, 26

BELT, V, ALTERNATOR DRIVE, 57354789, 148

BLOCK
57198921, 99
57205288, 331
FLANGE $, 57213936, 224
GUIDE, 52147543, 140
MANIFOLD, 57024044, 289
SUPPORT–ROD CHNGR, 57406076, 106
VALVE–BUTTERFLY, 57100091, 200

BLOCK–PIVOT ASSY–L.H, 57423014, 140

BLOCK–PIVOT ASSY–R.H., 57423006, 140

BLOCK–PIVOT–LOWER, 57422974, 144, 146

BLOCK–PIVOT–UPPER L.H., 57422990, 146

BLOCK–PIVOT–UPPER R.H., 57422982, 144

BLOWER, 57240194, 180

BLOWER ASSY., 57096836, 56

BLOWER HSG, 57284663, 366

BLOWER MOUNT, 51024792, 366

BLOWER WHEEL 20", 57284655, 366

BODY
VALVE, 57323628, 331
VALVE–INLINE, AL., 57484206, 398

BOLT
50815638, 246
52263563, 244
57355026, 12, 18
57356461, 12
57356479, 18
57356511, 20, 22
57356776, 28
57356800, 28
57357089, 38
57357683, 16, 40
57357709, 40
CHAIN, 50339043, 140
ROD CHUCK, 50519578, 102

BOLT USE 50594761, 59551226, 234

BOLT KIT, 51076271, 294

BOLT–SOCKETHEAD
57356701, 24
57356875, 30

BOLT–TRACK, 57356974, 34

BOWL, 57371841, 60

BOX, BATTERY, 58231887, 156

BOX ASSY–JUNCTION, 57490260, 351

BRACE, REAR MUFFLER MOUNT, 57231268, 158

BRACKET
50248871, 200
52227154, 224
52231818, 199
56970601, 288
57097941, 78
57102279, 120
57207169, 331
57231839, 99
57244444, 379
57315657, 314
57455966, 8
58232737, 131
CABLE GUIDE, 57446270, 141
CABLE PUMP MTG, 57500217, 338
FAN MOTOR, 57477259, 160
FILTER, 57361578, 288
FLOW CNTL VALVE, 57332744, 321
GREASE FITTING, 57216582, 393
HOSE, ROT. HYD., 57400764, 90
HOSE TRAY, 57390262, 314
LIGHT, 57157877, 355
LIGHT MTG., 57455149, 50
LIMIT SWITCH, 57359176, 335
MICRO SWITCH, 57391641, 120
MOUNTING
52208691, 120, 335

Index

57173700, 182
57173858, 180
MOUNTING–AMOT, 57139982, 191
OIL, 52235363, 148, 242
REMOVABLE GEARBOX
57216772, 113
57216806, 113
57216814, 113
UL88 HR2.5, 57331688, 198
VALVE, 50429455, 302

BRACKET – HOSE TRAY, 57390171, 314

BRACKET–JUNCT BOX, 57477697, 352

BRACKET–SWING CYLINDER, 57406050, 106

BRACKET–THRTLE VLV MTG, 50626977, 216

BRACKET–WRENCH CYL MOUNT, 57391104, 218

BREAKER
CIRCUIT–15 AMP, 57084055, 66, 79
CIRCUIT–20 AMP, 57091274, 66
CIRCUIT–5 AMP, 57117848, 66

BREATHER
50597483, 234
50903236, 241
95422663, 112
FILTER–3 MICRON, 57441941, 172

BRKT
ARM MTG – ROD SUPT, 57423790, 120
CYL MTG–ROD SUPT, 57423782, 120

BURNER ASSY, 57242240, 180

BUSHING
50412626, 140
50830397, 131
57054595, 112
57054603, 112
58232604, 130
CENTER, 57180184, 10
CHAIN ANCHOR, 50702927, 140
METRIC TO JIC, 57405151, 237
MODIFIED, 57116519, 366
QD, 2–3/8" SHAFT, 57405821, 186
REDUCER, 59551242, 234
ROD CHUCK–STEEL, 57083479, 102
TAPER–1.75 BORE, 57480980, 160
YOKE END, 57309791, 10

BUSHING–MASTER, 57357055, 36

BUSHING–TRACK, 57357014, 36

BUTTON, 57457277, 16

C

CAB, FAB–SWING DR.AC/C4MTG, 57448094, 50

CAB–CONSOLE SIDE, 57511867, 54

CAB–EXT. SIDE, 57511875, 54

CABLE
BATTERY, 30441570, 156
CONTRL, 50612506, 338
CONTROL, 57185886, 200
GROUND–1/0 X 36", 52246519, 153
WHIP CHECK, 56933732, 314

CABLE ASSY
FOR 25' TOWER, 57523508, 140
NEG–2/0AWG, 80", 57474686, 156
POS–2/0AWG, 64", 57474694, 156

CAM ASSEMBLY, 57150278, 232

CAM ASSEMBLY (14), 57053522, 232

CAM ASSEMBLY (25), 57033029, 232

CAM RING ASM, 52233194, 368

CANNISTER, 92473297, 184

CAP
50067479, 371
50173467, 44
52141801, 276
BEARING, 57191025, 88
CROSSHEAD, 57392292, 42
DATALINK–QSK/CELECT, 57482655, 352
END, 52188968, 134
SPINDLE–SPUR HEAD, 57347379, 89
SWIVEL, 57183329, 89
WEATHER, 50469238, 158

CARRIER ROLLER GROUP, 57356784, 28

CARTRIDGE
FLOW CONTROL, 57484198, 398
P. REDUCING, 57177982, 90
SHUTTLE, 57177990, 90

CASE, 50718055, 374

CHAIN
MACH., 57100117, 200
ROLLER–25FT TWR, 57531691, 140

CHAMBER, 52144276, 374

CHANNEL BRACKET, 57499691, 397

CHART, FAULT CODE – QSK, 57502155, 63

CHUCK, ROD–4" HEX, 50245422, 102

CHUTE, TRANSITION, 57060154, 366

CLAMP
57083552, 90

INDEX

Index

57173791, 180
6.00 DIA, 57173759, 182
6.75"EXHAUST, QSK, 57481970, 158
CABLE, 56804750, 96
DRIER AIR COND., 57095515, 78
FEED CYL–5 OD, 57315780, 140
FITTING, 57173726, 182
HALF, 50034818, 128, 393
HOSE
50034826, 218, 321, 326, 393
52230794, 366
56958523, 363
HOSE $, 58208851, 164
HOSE–3, 50428564, 208
STANDPIPE – TOWER, 57390254, 314
STANDPIPE–TOWER, 57390270, 314
SUPPORT FUELING, 57173718, 182

CLAMP ASSY
1–1/4 PIPE, 57092728, 314
1/2", 52236783, 331
3/4" , 52236791, 351

CLAMP–12" CAGE, 57399941, 158

CLAMP–CABLE, 58059650, 200

CLEVIS
50248848, 338
52267473, 200
57499667, 397
57505687, 397
57509135, 397

CLUTCH
56909930, 78
57241721, 130

COC/HOC/RAD–SIDE BY SIDE, 57494254, 160

COIL
CONDENSER, 57364358, 78
EVAPORATOR, 57477903, 82
SOLENOID–24VDC, 57305377, 120
VALVE, 57323636, 331

COLLAR–TRACK ROLLER, 57356909, 32

COMPOUND, SILICONE, 50700731, 89

COMPRESSOR, W/ORING PORTS, 57364341, 78

CONE, 50798909, 306

CONNECTOR
1/8 PIPE, 57173734, 182
3–WAY, FEMALE, 59895151, 156
57086332, 153
CORD GRIP, 50696939, 338
DATALINKDUETSCH, 57482523, 63
MALE, 57391559, 237
TAP TYPE, 855017P0841–1, 387

CONTROL, 52158094, 338

COOLER, FUEL, QSK19 ENGINES, 57472698, 174

CORE
52218054, 56
COC, 57498347, 162
HOC, 57498354, 162

COUPLING
ASSY, 36783710, 186
MIN $, 59713438, 224
SAE HALF, 57348468, 288

COUPLING ASM, 50463868, 371

COUPLING SAE HALF, 57348146, 288

COVER
57054611, 112
57457269, 16
58232562, 130
ASSY–PREHEATER, 57284275, 180
BATTERY, 57143505, 156
BRAKE HOUSING, 57419020, 130
FTG/90514L, 56988728, 228
HOSE DML, 57328148, 6
HOSE–R134A, 57477820, 79
NUT, 57104895, 94, 230
PRE–CLEANER, 57371833, 60
TOP, 57054629, 112

COVER ASSY
57357642, 38
57357659, 38

COVER–CARRIER ROLLER, 57356834, 30

CRANKSHAFT, 50708890, 374

CROSS, 95230900, 206

CROSSHEAD, 50718048, 374

CURTAIN
BOTTOM, 57505877, 397
DUST ANGLE, 57505851, 397
HINGE, 57505893, 398
VERT.EXTENDABLE, 57505869, 397

CURTAIN FLAPPER, BOTTOM, 57505885, 397

CUSHION
BOTTOM, 57301814, 54
SEAT BACK, 57301822, 54

CYL RETAINER, 52233954, 218

CYLINDER
57356545, 20, 22
HYDRAULIC
57039638, 218
57199093, 106

INDEX

WARNING: This manual contains data SPECIFIC to the drilling rig with serial number: 7341.

57407967, 397
57423808, 120
57488942, 341
57492563, 140
57498297, 99
57531626, 335
WATER PUMP, 50615871, 374

CYLINDER HYDRAULIC, 57488868, 42, 44

D

DECAL
A/C HEATER FILTER, 57290041, 50, 78
CORPORATE NAMEPLATE, 57497927, 406
DANGER, 57096745, 177
DANGER–ROT.BLADE, 57140469, 160
DHD LUBE SETTINGS, 57361982, 387
ENGINE STARTING, 57397002, 199
FRONT PANEL–DRILL, 57490591, 398, 409
HYDRAULIC OIL, 52223807, 242
IR LOGO–RED, 57362360, 406
LWRPANEL–DRILL/TRAM, 57490583, 409
MACHINE–DM45E
57093460, 406
57095887, 406
PREHEATER SWITCH, 57095770, 177
REG/UNLEADED GAS, 57094013, 177
UPPER PANEL–DRILL, 57490609, 409
UPPER PANEL–ENGINE, 57533911, 409

DECAL–GREASE
DMC TOWERS, 57536864, 393
M/F, DMC, 57536856, 379

DECKING
FRONT–CS, DM45/50, 57474215, 6
FRONT–DCS, DM45/50, 57474587, 6
REAR–CS, DM45/50, 57474595, 6
REAR–DCS, DM45/50, 57474637, 6

DIFFUSER, EXHAUST, 57173817, 180

DIODE, 3A, 600V , 57196677, 352

DIPSTICK, 59515007, 234

DISC 25, 57242588, 110

DISCONNECT, 57167132, 241

DOOR
CAB–SWING OUT–STEEL, 57412306, 54
FILTER ACCESS, 57290264, 366
INTERNAL SWING, 57425506, 54

DRIER, RECEIVER, 57364366, 78

DRIVE
50907104, 376
52249885, 376
PUMP–3 HOLE, 57352544, 224

DRIVE GROUP, 58025818, 12

DRIVE SHAFT
52188935, 134
57368524, 148

DRUM, 58232711, 131

DUST COLLECTOR–IR 3600, 57284309, 363

DWG, STOP LOC.–GEAR INDEX, 57368102, 107

E

ELBOW
59551275, 234
FLEX W/FLANGE, 57471864, 158
RUBBER, 57331886, 60

ELECT. PKG. –SWITCH, 57412132, 184

ELEMENT
57170839, 191
FILTER
50815653, 296
57082463, 366
57284697, 366
57301780, 60
FILTER–3 MICRON, 50343490, 296
FILTER–OIL, 57165763, 148
FLTR–3 MICRON
50343490, 404
52214178, 404
FLTR–MAIN HYD, 52263183, 246, 404
OIL FILTER, 36860336, 188, 404
OIL SEPARATOR, 57101636, 212
RETENTION, 57063877, 366
STRAINER–HR2, 35370063, 188

END CAP
50709666, 368
58226655, 112

ENG.BARE QSK19–600 1START, 57421380, 148

ENGINE SUPPORT, 57472433, 148

EVAPORATOR–DTAC–310–24V, 57450611, 78

EXTENSION
HOSE TRAY–30FT, 57503815, 315
TUBE, 57173874, 180

F

FAN BLADE–54IN. 8 BLADE, 57436024, 160

FC310–12 HOSE INDICATOR, F12X000J––/J––, 314

INDEX

Index

FILL VALVE, 57356602, 20, 22

FILLER, TANK – 3" NPT, 57505018, 172

FILLER CAP, 58211996, 162

FILTER
- 57477895, 82
- AIR RECIRCULATION, 57407876, 54
- BASE, 36860476, 188
- FUEL–QSK19, 57479123, 148
- HYDRAULIC, 52254885, 241
- MAGNETIC, 50630656, 288
- ORIGINAL COOLANT, 57232027, 148
- SERVICE COOLANT, 57499162, 148

FILTER & REGULATOR, 57082455, 366

FILTER ASSY–HYD, 52259363, 244

FINAL DRIVE, 58025800, 12

FINAL DRIVE GROUP–U/C, 57415929, 14

FITTING
- BULKHEAD–5/8MALE, 57452351, 79
- BULKHEAD–7/8MALE, 57452377, 79
- HYD
  - 52262631, 50, 304
  - 56953078, 237
  - 57080251, 191
  - 95341053, 172
  - 95647798, 172
  - 95649844, 341
  - 95678041, 191
  - 95829362, 287, 288
  - 95862371, 324
- L90
  - 16OFS X 20SAE, 57233983, 241
  - 20OFS X 16SAE, 57214116, 292
  - 20OFS X 20SAE, 57174070, 90
- L90–120FS X12SAE, 57167934, 90, 141, 225, 287
- L90–160FS X12SAE, 57296394, 141
- LUBE, 95705547, 106
- ORIFICE 1/16, 57499907, 398
- STR
  - 20OFS X 16SAE, 57279622, 292
  - 20OFS X 20SAE, 57167454, 224, 314
- TEST, 57328676, 90, 288, 315
- TEST $, 57328676, 224
- TUBE, 50364199, 241

FLANGE
- 50691989, 224
- MOUNTING, 52188851, 134
- STRAIGHT – SAE, 57409443, 224

FLANGE BLOCK, 1" O'RING, 57469546, 224

FLOORMAT *, 57495780, 50

FLOORMAT–5'X5', LAVATWIST, 57484313, 50

FOOT
- FRONT, 50718063, 374
- JACK, 50346436, 44

FOOT PIECE–HYD JACK, 57501421, 398

FORK, 3.5", 57443913, 99

FRAME, REAR–WELDMENT, 57497315, 397

FRAME PLATFORM, 57480451, 8

FRONT IDLER, 57356628, 18

FRONT IDLER GROUP
- 57354961, 12
- 57356503, 18

FUSE, 15A, 52241106, 177

G

GASKET
- 50636513, 130
- 50830546, 130
- 52154952, 92
- 52155053, 92
- 52240132, 130
- 52240140, 130
- 52260734, 130
- 52263787, 186
- 56953045, 112, 128
- 57030405, 164
- 58192915, 112
- 58194960, 112
- 95568960, 186
- SHIM PACK
  - 57185894, 113
  - 57185902, 113
- TOP, 50819200, 390

GASKET–SEPR ELEMENT, 57212409, 212

GAUGE
- AIR PRESS–400 PSI, 56951395, 63
- AMMETER, 57515314, 66
- FLUID LEVEL–26", 57363657, 390
- FUEL, 50616762, 172, 371
- FUEL–24VDC, 57534281, 66
- PLUG, 57095242, 180
- PRESSURE, 57112963, 366
- PRESSURE–0–5000PSI, 56930688, 63, 318
- PRESSURE–2.5 IN
  - 57112963, 200
  - 57112971, 200
- SIGHT
  - 35516749, 212
  - 52253176, 89
- TEMP, 57093155, 66

WARNING: This manual contains data SPECIFIC to the drilling rig with serial number: 7341.

Index

GAUGE ASSY, AIR–400 PSI *, 57429920, 63

GAUGE ASSY *
57092686, 63
57092694, 63
57092702, 63

GAUGE ASSY–ENGINE OIL, QSK, 57533945, 66

GEAR
50597665, 234
INTERMEDIATE, 57159113, 88
OUTPUT, 52202736, 88
PINION, 52193521, 112
WORM, 58194937, 112

GEAR/SPIDER, 52259769, 130

GEROLER, 57012478, 376

GEROTOR SET, 52188950, 134

GLASS, 35277151, 246

GROMMET
57173767, 180
57173775, 180
RUBBER, 57097792, 177, 184

GUARD
A/C DRIVE, 57336117, 78
COUPLING, 52231107, 371
DRIVESHAFT–QSK, 57491011, 72
FAN–LOWER, 57502544, 162
FAN–UPPER, 57502536, 162
GEAR – CAROUSEL, 57351694, 113
SWITCH, 57098626, 177

GUARD ASSY
57357667, 40
57357675, 40

GUIDE
57495236, 397
BLOCK–LONG R.H., 57386427, 89
FINISHED POWERHEAD, 57143778, 89
SHEAVE/SPRKT, 57414641, 140

GUIDE SLIDE – R.H., 57376832, 89

GUIDE SUPPORT, 57505786, 399

GUSSET
57083172, 314
57390049, 314
57505745, 397
BOTTOM–LEFT, 57498628, 397
BOTTOM–RIGHT, 57498610, 397

H

HANDLE
ASSIST, 57214983, 54
INSIDE, 57425555, 54

HANDLE ASSY, 50613728, 250, 266

HANDLE–STEP, 57455271, 4

HANDRAIL – 38”, 57455842, 8

HANDRAIL – 70”, 57455859, 8

HANDRAIL ASSY–40”CNT DIST, 57424400, 2

HANDRAIL ASSY–60” CNTDIST, 57471989, 2

HANDRAIL ASSY–80”CNTDIST, 57481236, 2

HANDWHEEL, INDICATING, 57141905, 304

HARNESS
ENGINE QSK–1START, 57500795, 153
LIGHT–DRLL/TRAM, 57497257, 351
QSKECM/BATT/COOLA, 57479198, 153
WIRE QUANTUM, 57500787, 351
WIRE–COMMON, 57500209, 351
WIRING, 57477978, 82

HEAD
13084215, 124
57242604, 110

HEADCAP, 57242596, 110

HEATER, ASSY–LESS CABLE, 57276909, 54

HOIST, JIB, 52263159, 128

HOLDER, FUSE, 57130577, 177, 387

HOLDER ASSY. 5 ROD 25’, 57229023, 106

HOLDER–ROD SEAL, 50453729, 402

HOOK, SWIVEL–2 TON, 57138950, 128

HOSE
57277428, 324
AIR, 95433330, 314
DRAIN, 57477960, 82
DROPOUT, 57446437, 366
FUEL LINE, 57173742, 182
RADIATOR
56983943, 164
56989353, 164
SUCTION–8”X 8’–4”, 57076507, 363

HOSE ASSEMBLY
57183832, 242
97118251, 398

HOSE ASSY
–12X256” R134A, 57506073, 78
52197589, 174
52197860, 288
52225596, 310

Index

52226453, 63, 304, 379, 393
52226461, 324, 379
52255270, 393
56242597, 393
56242605, 393
56242613, 393
56947674, 310
56948557, 191
56949399, 335
56949407, 289, 324, 335, 341
56949449, 321
56950082, 120
56953896, 237
56953912, 288
56954076, 335
56954092, 201
56954167, 372
56954183, 148
56954233, 148
56954274, 237
56955974, 304
56956147, 321
56956444, 332
56956675, 242
56956899, 172
56957632, 287
56957780, 363
56957798, 201
56957830, 288
56959919, 371
56961766, 304
56961782, 326, 331
56961816, 99, 300
56961824, 300, 341
56964208, 304
56964224, 393
56964232, 199, 218
56964281, 341, 379
56964307, 393
56964349, 68
56964372, 199, 393
56966211, 398
56968084, 335, 341
56968365, 99
56969652, 372
56971559, 326
56971930, 324
56972698, 393, 398
56973027, 242
56973696, 199
56974140, 287
56974587, 200, 288, 341
56987910, 289
56987936, 289
56992050, 324
56992357, 314
56992514, 300
56994593, 199
57004004, 324
57004020, 218
57004046, 148
57005696, 379
57015505, 287
57015992, 120
57020703, 287
57020729, 393
57020836, 287, 324
57029183, 191
57034308, 199
57034357, 172
57036618, 302
57040784, 128, 331
57043218, 379
57043697, 199
57043812, 199
57043820, 199
57044521, 289
57044661, 242
57044737, 318
57044752, 379
57055055, 393
57057440, 200
57057929, 363
57077927, 191
57094948, 200
57095085, 199
57096505, 393
57097081, 199
57097909, 363
57100281, 324
57100935, 72
57101164, 287
57101263, 287
57101438, 287
57133225, 99
57146912, 172
57148199, 383
57229965, 300
57235590, 393
57239477, 120, 237
57249096, 363
57277402, 288
57290710, 120
57298069, 90
57311912, 300
57311920, 363
57328973, 321
57330284, 300
57337271, 191
57342651, 287
57342891, 90

57343675, 379
57345324, 398
57347429, 288
57377947, 78
57377954, 78
57384539, 174
57397960, 288
57403685, 302
57412322, 172
57425472, 79
57425696, 79
57430977, 237
57437139, 398
57439564, 90
57439895, 90
57449415, 241
57451841, 371
57464018, 287
57464760, 310
57464950, 200
57475857, 72
57475998, 72
57476004, 72
57480741, 287
57480774, 287
57480790, 287
57480808, 287
57481186, 387
57496150, 383
57496341, 199
57498818, 310
57498826, 310
57498834, 310
57507121, 79
57525347, 310
58042730, 289
58067836, 331
58143421, 200
58143439, 289
58144585, 288
58146622, 68, 331, 393
58154329, 288, 341
58163833, 200
58170440, 398
58170465, 304
6X312", R134A, 57413486, 78

HOSE ASSY., 57209322, 218

HOSE INDICATOR
FC254−20, V20X000A−−/F−−, 314
H12X000A−−/A−−, 314
H16X000A−−/A90, 314
V20X000A−−/A45, 314

HOSE TRAY
57083008, 314
57083016, 314

HOUSING
1/2 NPT PORTS, 52188927, 134
35251529, 246
4X6 LIGHT, 57157885, 355
BEARING, 50875368, 376
BLOWER, 57063711, 366
BRAKE, 57419012, 131
GEAR, 57054637, 112
GEARBOX, 59551127, 234
HALF, 52240090, 130
LOWER SEAL, 52208931, 88
MACHINED−R.H., 57395444, 88
SINGLE ELEMENT, 50815703, 296
UPPER SEAL, 52248150, 88
VALVE, 50961184, 376

HYD. MOTOR MODIFICATION, 57154916, 112

I

IDLER & BEARING ASSY, 57356719, 26

IGNITION UNT, 57095168, 180

INDICATOR
CARROUSEL−5 ROD, 57339905, 106
PANEL MTG. RED, 57438863, 63
PANELMTG.YELLOW, 57438889, 63

INSERT, BEARING, 50709013, 374

INSTL−STEP, DC SIDE, 57491284, 2

J

JACK ASSY, 57505208, 397

JACK FOOT PAD, 57196735, 42

K

KEY
52249877, 376
57074668, 112
57209926, 112
95459061, 112
INTERMEDIATE SHAFT, 57159139, 88
WOODRUFF, 52188893, 134

KIT
CAB HEATER, RETROFIT, 57245631, 54, 56
LATCH, 57138968, 128
LIGHT GAUGE − 24VDC, 57443954, 66
REPAIR
35063643, 204
57095226, 180

Index

57095234, 180
UL88, 57389108, 204
REPAIR–PISTON, 50822162, 374
REPAIR–VALVE, 50822154, 374
SEAL
57032997, 232
57039810, 218
57089039, 92
57089047, 92
57089054, 92
57107914, 294
59729707, 376
SEAL CYLINDER HYD, 57349185, 99
SEAL–SHT, 50943331, 92
SERVICE, 57095184, 180
SPACER BEARING, 51375475, 376
SPLIT FLANGE, 56950579, 90
WIRING QSK DECELERATE, 57497117, 148

KIT–DISC(BRAKE), 57457293, 14

KIT–SEAL(BRAKE), 57457301, 14

KNOB
50135888, 216
BLACK, 50830355, 260, 278
CONTROL, 58235268, 56
FAN, 57477929, 82
TEMPERATURE, 57477945, 82
TRANS. SHFT CONTROL, 57115503, 338

L

LADDER, 57214587, 50

LADDER–STEP, DC SIDE, 57491276, 4

LAMP
24V, 58175019, 50
FLOOD–70W HALOGEN, 57147282, 355
PANEL, 50611235, 335
TRAP–70W HALOGEN, 57157893, 355

LATCH
57096984, 54
DOOR, 57004152, 54

LED, 24V AC/DC RED, 57364010, 66

LENS, LEXAN, 57097990, 50

LEVEL, 50046861, 70

LEVEL *, 57100075, 63

LEVER, 50830348, 260, 278

LEVER BRKT, 58176207, 260, 278

LH PLATE ASSY–WARNING, 57356537, 22

LIGHT
DOME, 57097982, 50
LED INDICATOR, 57297137, 387
PANEL, 50704196, 50
PILOT, 50270040, 335

LIGHT ASSEMBLY, 57173866, 180

LINK
50668060, 260, 278
BUTTERFLY VALVE, 57471971, 198
MAIN PUMP CONTROLS, 57503682, 338

LINK–LH TRACK, 57357030, 36

LINK–RH TRACK, 57357071, 36

LOCK, SPINDLE, 50628007, 116

LOCK–NUT, 13084207, 124

LOCKING HANDLE, 57425548, 54

LOCKNUT, 57242554, 110

LOWER HSG SECTION, 57284630, 366

LUBRICATOR ASSM–60GL DHD*, 57354755, 383

M

MAGNET ASSY, 50815661, 296

MANIFOLD
52162138, 198
52223690, 216
52263530, 244
52263548, 244
56932965, 324
AIR IMPULSE, 57284689, 366
HYD. ORING THDS, 57350076, 288
RETURN, 57482556, 241
RETURN SAE PORTS, 57431983, 288

MANIFOLD COOLANT INLET, 57504227, 164

MANIFOLD ENG.COOL.OUTLET, 57504219, 164

MANIFOLD ENG.COOLANTINLET, 57471773, 164

MANIFOLD–FEED CNTRL VLV, 57447849, 262

MOTOR
24V, 58234501, 56
24V–EVAPORATOR, 57477853, 82
HYD. TRACK/DR, 57415044, 14
HYDRAULIC
50820935, 128
52235207, 371
57003782, 366
HYDRAULIC–7.25CU IN, 57149163, 88
HYDRAULIC–AX.PISTN, 57477242, 160

WARNING: This manual contains data SPECIFIC to the drilling rig with serial number: 7341.

Index

MOTOR & GEAR REDUCR ASSY*, 57199051, 107

MOTOR ASSEMBLY, 57240202, 180

MOUNT
CYLINDER, 57095853, 184
DIVERTER VALVE, 57454910, 292
ENGINE, 56981657, 148
FLEX−BOLT SANDWICH, 57139131, 153
REMOVE 7 ROD *, 57217531, 112
SEAT, 57096950, 54

MOUNT HOIST, 57383648, 128

MOUNT SILENCER, 57471856, 158

MOUNTING, CONDENSER, 57481525, 78

MOUNTING−FUEL COOLER, 57481533, 174

MTG BRKT
52208691, 218
58160458, 200

N

NAMEPLATE
10' INDICATOR, 57233157, 409
15' INDICATOR, 57233165, 409
20' INDICATOR, 57233173, 409
25' INDICATOR, 57233181, 409
30' INDICATOR, 57233199, 409
5' INDICATOR, 57233140, 409
57095846, 184
DEPTH INDICATOR, 57233124, 409
DHD CONTROL, 57361990, 387
ENGINE THROTTLE, 57392417, 409
MODEL I.D., 57497687, 409
O' INDICATOR, 57233132, 409

NAMEPLATE−FILTER, 57511859, 409

NAMEPLATE−SPOOL FN, ANGLE, 57492761, 398

NAMEPLT., ROD SUPP. RETR., 57336083, 121

NIPPLE, PIPE−2"SCH80 24"LG, 57396707, 90

NOZZLE, FUEL, 57095200, 180

NUT
50635945, 254, 270
50943240, 234
57356677, 24
57357691, 40
58025842, 16
58232679, 130
58232752, 131
ACORN, 57239725, 230
ADJUSTING, 57291304, 88
JAM
57104929, 230
57104937, 94, 230
JAM−1/8 SAE 45 DEG, 57452393, 79
JAM−5/8 SAE 45', 57452369, 79
SPEED, 52144409, 374

NUT−TRACK, 57356990, 34

O

O RING−SEAL
57356594, 20, 22
57356925, 32

O−RING
35251511, 246
35277797, 188
50597434, 234
50605682, 252, 254, 268, 270
50605690, 254, 270
50605708, 254, 270
50605732, 254, 270
50605757, 256, 258, 272, 274, 276
50636547, 134
50717735, 234
50717743, 234
50815695, 296
51076156, 294
51076164, 294
51076172, 294
52144243, 92
52154937, 92
52154994, 92
52155314, 92
52203767, 92
52263555, 244
57107906, 294
57220345, 126
57224081, 110, 220
57242562, 110
57326795, 220
57337297, 92
57362105, 126
95000477, 191
95017984, 306
95018065, 90
95018081, 266
95045324, 234
95070603, 246
95086229, 92
95086310, 228
95097663, 92
95097689, 92
95097929, 90
SHUTOFF VALVE, 57440661, 78

INDEX

Index

ORIFICE
.038, 50459486, 164
.09, 35306984, 199
35517234, 201

P

PACKING
52144318, 374
SWIVEL, 50694876, 89
SWIVEL−30XV, 57336067, 89

PANEL
CONTROL, 57202723, 54
ELEC ASM−CELECT/HPI, 57533929, 63
ELECTRICAL UPPER, 57490567, 58
ELECTRICAL−UPPER, 57534018, 409
MOUNTING, 57078032, 58
ONE GAUGE, 57534315, 66

PILOT SECTON, 50634351, 254, 270

PIN
50067834, 42, 44
50830322, 260, 278
50875525, 376
52141736, 276
56887268, 397
57273229, 120
57356735, 26
57356941, 32
ADAPTER CHAIN, 57407181, 140
ANCHOR, 50171941, 42, 44
ARM−ROD SUPPORT, 57430530, 121
CENTER, 57180168, 10
CYLINDER
50339001, 140
50813567, 341
57268112, 106
END YOKE, 57188112, 10
HINGE, 95265336, 198
JIB ARM, 57120339, 128
LOCKING −CYL., 57423832, 120
PIVOT, 57273237, 120
ROLL, 95213310, 106
ROLL−3/8 X 3−3/4, 95246062, 141
SPROCKET
50338987, 140
52227337, 140
SUPPORT−FUEL TANK, 57474579, 172, 372
TOWER LOCKING, 57141715, 335
TOWER RAISE CYL, 57388787, 341
WRIST, 50718030, 374

PIN−CYLINDER, ROD CHANGER, 57406068, 106

PIN−TRACK
57357022, 36
57357048, 36

PINEYE ASSEMBLY, 57423915, 124

PINION
50597657, 234
INPUT, 57170110, 88

PIPE
57495616, 397
95341798, 44
BUSHING, 57505760, 399
COMPR.DISCHG−N14/HR2, 57474710, 208
EXHAUST ELBOW, 50622810, 158
GUIDE, 57505778, 399

PISTON
50634377, 254, 270
52249604, 306
57242612, 110
57356560, 20, 22
57423931, 124

PIVOT − WRENCH CYL MOUNT, 57391112, 218

PLATE
50348804, 288
50636059, 256, 258, 272, 274, 276
50650399, 130
50907112, 376
BALANCE, 50875491, 376
BRASS, 50650381, 130
CAM, 57206831, 331
CONNECTION, 57495202, 397
COVER
50702919, 88
52180577, 88
52247657, 186
END, 57191033, 90
INDICATOR, 57173841, 180
LOCKING
50339019, 140
50813575, 341
MOUNT
57205478, 331
57445702, 96
MOUNTING, 50258193, 128
MTG, 57244980, 288
MTG −IR LOGO, 57397325, 140
PORT, 52179488, 368
TOP−CONTROL PANEL, 57448110, 58, 398, 409
TOWER PINNING, 57389330, 335
VALVE MOUNT, 57202731, 58
WEAR, 50875426, 376

PLATE FRONT, 57202756, 58

Index

PLATE SPACER, VALVE, 57329989, 315

PLATE–SWING CYLINDER, 57406035, 106

PLATFORM
CAB–DML/DM45/50, 57491979, 50
DC–ANGLE/TELESC., 57532731, 397

PLUG
1/2–ORING, HEX SOC, 95504015, 262
1/8 O–RING–HEX SOC, 95926838, 262
50691765, 241
50718162, 374
50998103, 134
57456261, 16
58232612, 130
59551267, 234
B POWER HEAD, 57480055, 94
MAGNETIC, 59514976, 234
MAGNETIC 1" NPT, 57408353, 390
MANIFOLD–HP, 57448128, 262
MINI, 57093775, 241
NYLON, 57012676, 110, 218
OIL LEVEL, 59551259, 234
ORING–SAE 32, 95746194, 172, 372
PIPE–1/8 SQ HEAD, 95267068, 393
PIPE–2" HEX HEAD, 95437349, 390
PIPE–3" RUBBER, 57408346, 390
STRAINER, 35609098, 188
VENT, 57094526, 241

PLUG $, 30395610, 212

PLUG ASSEMBLY
50907146, 376
CHECK, 50907179, 376

PLUG–CLEAR, 57356891, 32

PLUG–PIPE, 57356768, 26, 30

PLUG–PORT, 57401622, 124

PLUNGER, TEFLON, 57431223, 387

POINTER, 57342719, 107

POPPET
50634369, 254, 270
50634393, 254, 270
50635994, 254, 270

PRE–CLEANER, 57371759, 60

PRECLEANER/FILTER KIT, 57408783, 54

PREHEATER–ENG.COOL., GAS, 57095150, 177

PRESSURE PLATE–CLUTCH, 57241747, 130

PUMP
DHD LUBRICATOR, 57352973, 387
DOUBLE–HYDRAULIC, 57220857, 224
FUEL, 50258441, 172
HYDRAULIC–MAIN $, 52226834, 228
OIL, 36861144, 188
WATER–8 GPM, 50822147, 371

PUSHBUTTON, 2–POSITION, 57358855, 66

R

RACE
BEARING, 52188885, 134
THRUST, 50219534, 106

RADIATOR ASSY, ENGINE, 57524357, 162

REAR FOOT, 50717990, 374

RECEIVER ASSY, HORIZONTAL, 57532970, 210

REGULATOR
57196842, 198
PRESSURE, 57442477, 206
UL88, 57093056, 198

REGULATOR–UL88, 36720381, 204

RELAY
57137606, 351
SOLENOID–24VMARINE, 59956466, 153

RELEASE, INSIDE–SWING DOOR, 57425522, 54

RELIEF, 50634336, 252, 268

REPAIR KIT, REGULATOR, 57197642, 198

RESISTOR, 24V, 58234519, 56

RETAIN RING, 95780060, 260, 278

RETAINER
57046831, 120
57273245, 120
57356859, 30
BEARING, 50248368, 106
CABLE, 57410599, 140
TRACK, 52264652, 10

RETRACTOR, PIVOTING, 57530537, 99

REWORK GEAR, 57210247, 112

REWORK HUB, 57210239, 112

RH PLATE ASSY–WARNING, 57356529, 20

RING
50046846, 70
57356578, 20, 22
57356586, 20, 22
57457244, 16
BACK–UP
50605716, 254, 270
50605724, 254, 270
57163529, 220

Index

57224099, 110
CAST IRON, 57242570, 110
LOCK, 50650407, 130
RETAING
50815711, 296
52141793, 276
RETAINING
57068215, 124
95223475, 234
RETAINING–BREAKOUT, 57200628, 99
SNAP
50597442, 234
50717982, 374
THREADED, 50610971, 89

RING–RETAINING, 57356958, 32

ROD
57356651, 24
57423949, 124

ROD ASSY
50613736, 250
50613769, 266
50718022, 374
57242638, 110

ROD CHANGER SUB ASSY, 25', 57523425, 102

ROD SEAL–4.5", 50516970, 402

ROLL PIN, 50668078, 260, 278

ROLLER & BEARING ASSY
57356842, 30
57356917, 32

ROLLER GROUP, 57354979, 12

ROLLER GUIDE, ROD SUPPORT, 57423824, 120

ROPE
WIRE, 57047060, 96
WIRE–3/8 X 59', 58231812, 128

S

SCREW
1/2" DRILLED, 57504250, 398
50635978, 254, 270
50636000, 256, 258, 272, 274, 276
50718105, 374
50830363, 260, 278
52252053, 130
58232588, 130
95079406, 318, 324
95471157, 180
95578423, 180
95657425, 180
ADJUSTING, 50636026, 256, 258, 272, 274
CAP, 95705364, 90
CAP HEX HEAD, 95971552, 331
CAP–5/16 X 1–1/2, 50799170, 134
CAP–5/16 X 7/8, 50491729, 134
SET
57012684, 110, 218
57239717, 94, 230
STOP, 50527308, 204

SCREW TERMINAL SOCKET, 57137614, 351

SEAL
14–12 AWG CABLE, 57400715, 156
50605740, 256, 258, 272, 274, 276
50718089, 374
50727429, 30
50727734, 30
52155363, 92
52218500, 131
57027310, 26
57417313, 16
57456246, 16
57456279, 16
57457285, 16
58025834, 16
58232661, 130
BACKUP, 57220337, 126
BRAKE, 57308009, 131
OIL
50717750, 234
52146784, 88
52164282, 88
58227661, 112
58229915, 88
PISTON, 50798933, 306

SEAL GP., 57183014, 32

SEAL GROUP–DUO CONE, 50727031, 30

SEAL GROUP–METAL FACE, 57356727, 26

SEAL KIT
52188976, 134
56928484, 368
57103814, 397
57242547, 110
57425043, 124
57512006, 335
CART. VALVE, 57439077, 90
CYLINDER, 57511222, 341
PUMP, 57307886, 387

SEAL KIT–CART.VALVES, 57439077, 262

SEAL KIT–CHECK VALVE, 57448102, 262

SEAL KIT–COUNTERBLNCE VLV, 57447906, 262

SEAL–LIP TYPE, 57356552, 20, 22

Index

SEAT
50636034, 256, 258, 272, 274, 276
50798891, 306
51218287, 54
VALVE, SST, 57389116, 204

SECTION
57327538, 266
OUTLET, 50953496, 250
VALVE INLET, 50617091, 250, 266
VALVE OUTLET, 50613181, 266
VALVE SPOOL
50613199, 250, 266
50613207, 250, 266
50613215, 266

SENSOR, MAGNETIC, 57037335, 153

SERVO
INPUT–MOTOR A SIDE, 57480048, 92
PUMP–INPUT, MANUAL, 57480386, 228

SHAFT
57053555, 232
57054587, 112
58232703, 131
INPUT, 50595115, 234
INTERMEDIATE, 57191017, 88
MOTOR
57300212, 92
57300220, 92
OUTPUT, 52188901, 134
PIPE ASSY–25'RDCHG, 57523433, 106
SUPPORT–MIDDLE, 57405979, 106

SHAFT ASSY–TRACK ROLLER, 57356826, 30

SHAFT–IDLER, 57356743, 26

SHAFT–TRACK ROLLER, 57356933, 32

SHEAVE
MACHINED–1 ROPE, 57432700, 140
WIRE, 50245810, 128

SHEAVE W/BUSH–1 ROPE, 52228848, 140

SHIELD, HEAT–SILENCER, 57481517, 158

SHIM
50248889, 200
52223872, 160
57149080, 89
GUIDE, 50624709, 89
PAK, 56939028, 148
POWER HEAD–SPURGEAR, 57243719, 89

SHIM SET, 52210317, 89

SHOE–TRACK, 57356982, 34

SHRINK DISCS, 52210291, 88

SIGHT GLASS ASSY, 57499105, 162

SILENCER
35132299, 201
57024234, 158

SLEEVE
52249620, 306
ADAPTER, 52143195, 234
PRE–CLEANER, 57371858, 60
SPLINE, 59516096, 234
WEAR, 50822097, 88

SLIDE, 50072347, 42, 44

SLING LINK, 57146474, 128

SLINGER
52144391, 374
52187804, 89

SPACER
.5X1.75ODX1.06ID, 57188963, 96
50248426, 106
52141785, 276
52209798, 88
57068991, 112
57120347, 128
57173825, 180
57357063, 36
57357717, 40
57505794, 399
CAB, 50693308, 50
INTERMEDIATE GEAR, 57159121, 88
SWIVEL PACKING, 57371163, 89

SPACER PLATE, 52188943, 134

SPARK PLUG KIT–PRE–HTR, 57095192, 180

SPIDER KEY, 50830421, 131

SPINDLE, DRIVE, 52210275, 88

SPRING
35251552, 246
50634385, 254, 270
50635986, 254, 270
50636042, 256, 258, 272, 274, 276
50650456, 130
50798925, 306
50875533, 376
52141744, 276
57241739, 130
57356644, 24
58025859, 16
COMPRESSION, 50709336, 296
HOLD DOWN, 57137622, 351

SPRING GROUP–RECOIL, 57356610, 18

SPRING PLATE, 50815679, 296

SPROCKET
2"P. 20 TEETH, 57407009, 140
TRACK, 57355018, 12

INDEX

Index

SPROCKET GROUP, 57354946, 12

SPROCKET W/BUSH–20T, 57407173, 140

STANDPIPE
- 57082554, 314
- 57085573, 314
- 57085599, 314
- 57424806, 314

STARTING KIT, 57047300, 184

STEM, HOSE, 57085128, 208

STEP, CAB, 57214470, 50

STOP
- 57505224, 99
- ROD CUP, 50519586, 102

STOP BLOCK
- BULL GEAR
  - 57209306, 107
  - 57209314, 107
- CENT. BUSH, 57198939, 99
- PIPE CUP, 57212474, 107

STOP PLATE, 57495228, 397

STOPPER–RUBBER, 57356883, 32

STRAINER, OIL, 50247691, 241

STRAINER ASSY–HR2, 35092279, 188

STRAINER BODY, 36751295, 188

STRAP
- 57173809, 180
- 57495525, 399
- 57495574, 397
- 57498933, 397
- 57498958, 397
- 57498966, 397
- 57498974, 398
- 57498982, 398
- 57498990, 398
- 57499006, 398
- 57499758, 397
- 57499774, 397
- 57499782, 397
- 57500746, 397
- 57500753, 397
- 57500761, 397
- 57500878, 398
- 57500886, 398
- 57505695, 397
- 57505703, 399
- 57505711, 399
- 57505729, 397

STRIKER, DOOR LATCH, 57240921, 54

STRIP, 57356693, 24

STUD, 50594761, 234

SUB 52247129, PUMP, 57197402, 224

SUB 95077319 HEX NUT, 95080214, 141

SUBPLATE
- 57106965, 294
- 57232589, 120
- MANIFOLD, 57329583, 289

SUPPORT
- 57356685, 24
- CAB, 50693290, 50
- COMPRESSOR, 57170896, 186
- FEED CYL–5 OD, 57315798, 140
- PIPE, 57523060, 397
- RANGE SPRING, 57098436, 204
- REC, 52147550, 210

SUPPORT ASSY, 57356636, 24

SUPPORT LEG – COOLER, 57503591, 160

SUPPORT LOWER–ROD CHNGR, 57405953, 106

SUPPORT MIDDLE–ROD CHNG, 57405961, 106

SUPPORT ROD–HOSE COVER, 57475956, 6

SUPPORT UPPER– ROD CHNGR, 57405946, 106

SUPPORT–L.H., 57455941, 8

SUPPORT–R.H., 57455958, 8

SWITCH
- 52218146, 56
- 52218294, 78
- COOLANT–N14, 57474140, 352
- DPDT/ON–OFF–ON $, 57243180, 63
- FLUID FLOW, 57353021, 387
- KEY, 56993678, 66
- LIMIT, 50518653, 120, 331, 335
- PRESSURE, 52232428, 352
- PUSH BUTTON , 52185832, 66
- ROTARY, 57477937, 82
- SAFE., 57095176, 180
- SPST REED, 57428914, 387
- SPST/ON–OFF, 57179608, 63, 387
- TOGGLE
  - 57173833, 180
  - 57179616, 120
  - 57216913, 63
- TOGGLE–SPST, 56762198, 66

SWITCHGAGE
- 57018533, 66
- OIL PRESSURE, 56993702, 68

SWIVEL, 52248176, 89

SWIVELS, 57176737, 338

INDEX

Index

T

TACHOMETER, 56993694, 66

TANK
- ASSM. FUEL, 57173882, 182
- DHD LUBE–60 GAL., 57354094, 387
- FUEL, 57095259, 177
- FUEL–280 GAL.CAP., 57474678, 172
- HYDRAULIC – DML, 57481061, 241
- OIL SEPARATOR, 57159212, 212
- WATER–200 GAL., 57474728, 371

TEE–JIC RUN/ORING, 57482580, 310

TERMINAL, 14–16 AWG MALE, 59854828, 156

THERMOMETER, 50463454, 241

THERMOSTAT, 57477952, 82

THROTTLE VLV, 52223666, 214

TIE ROD–3/8 X 7 IN., 57396848, 198

TIMER
- DC ELECTRIC, 57284671, 366
- DHD LUBRICATOR, 57354342, 387

TOOL
- CRIMPING, 57482614, 156
- PIN/SEAL–EXT INSTL, 57482606, 156

TRACK ADJUSTER GROUP–LH, 57356495, 18

TRACK ADJUSTER GROUP–RH, 57356487, 18

TRACK GROUP, 57354987, 12

TRACK GUIDE GUARD GROUP, 57355000, 12

TRACK LINK ASSY, 57356966, 34

TRACK MOTOR GUARD GROUP, 57354995, 12

TRACK ROLLER GROUP, 57356792, 28

TRANSITION–8", 57059644, 363

TUBE
- 50906379, 234
- DEARERATION NTA855, 57221228, 164
- FLEX. EXHAUST, 57173783, 180
- SUCTION–FUEL, 57475873, 172, 372

TUBE ASSEMBLY, 57423956, 124

TUBE ASSY, 57242620, 110

TUBING, ROD CATCHER, 57445678, 96

TUBING ASSY
- 57531345, 399
- 57531352, 399
- 57531360, 399
- 57531378, 399
- 57531386, 399

U

U–BOLT, 95381828, 310

U–BOLT $, 50424134, 210

U–CUP
- 57163453, 220
- 57220352, 126
- 57233652, 126
- 57326803, 220
- LOADED, 57224115, 110

U–JOINT KIT, 57113656, 148

UNDERCARRIAGE, 325L W/Y&A, 57474660, 10

UPPER HSG SECTION, 57284648, 366

V

V–BELT, 95802245, 78

VALVE
- 2–WAY, 50429356, 302
- 2–WAY SOL. CART., 57323610, 331
- 2–WAY SOLENOID
  - 57194961, 331
  - 57194979, 331
- 3 SPOOL, 57204711, 248
- 3 SPOOL–INSTL *, 57204729, 398
- 3–WAY, 50258128, 198
- 4–WAY, 57106460, 294
- 50416551, 20, 22
- 50907120, 376
- 57232571, 120
- 95072971, 387
- 9SPL–W/2 RLF SECT, 57498842, 264
- AUTO BLOWDOWN, 35849215, 201
- BALL, 57417156, 54, 56
- BALL–3/4", 50212224, 72, 177
- BUTTERFLY, 8", CW, 57330292, 186
- BY PASS, 57113367, 246
- CHECK
  - 36843720, 208
  - 50247733, 241
  - 50261825, 241, 242, 310
  - 50347889, 314
  - 50829480, 172
  - 56986656, 324
  - 57081077, 383
  - 57408775, 387
- CHECK–16 JIC, 57167728, 224, 242
- CHECK–DBL PILOT OP, 50462944, 120, 326, 335, 398
- CHECK–DBL PILOT OP., 50462944, 218
- CHECK–VENTABLE, 57168031, 304, 324
- DIRECT ACTNG RELEF, 57218117, 331

Index

DIVERTER, 57106429, 292
EXPANSION BLOCK, 57477911, 82
FLOW CONTROL
50518984, 371
57284705, 366
IMPULSE, 56934185, 366
MANUAL SHUTOFF, 52172723, 206
MEASURED SHOT, 57301855, 184
MIN. PRESSURE, 57391047, 214
MOTOR CONTROL, 57167298, 90
NEEDLE, 52210986, 198
PILOT, 57163339, 200
POPPET–ANTI RUMBLE, 35316405, 199
PRESSURE–REMOTE, 52236932, 304
PUMP RELIEF, 57244352, 288
RELIEF
50622273, 200
52146883, 371
57294936, 198
57352825, 242
58232596, 130
RELIEF (ATM), 57326514, 90
RELIEF–75 PSI, 35321645, 191
RELIEF–VENTED, 57142515, 310
RESTTRICTOR, 57290397, 321
SAFETY
50621986, 206
57018673, 366
SELECTOR– 4 WAY, 57169989, 298
SHUTOFF
DISCHG, PORT, 57440646, 78
SUCTION PRT, 57440653, 78
SOLENOID, 57003790, 366
TEMPERATURE BYPASS, 57170821, 191

VALVE ASSEMBLY *, 57169997, 289

VALVE ASSY, DIVERTER *, 57450751, 288

VALVE ASSY–4 SPOOL *, 57493512, 398

VALVE STOP D, 50058072, 216

VALVE–CHECK, 57447880, 262

VALVE–COUNTERBLNCE VENTED
57447856, 262
57447864, 262

VALVE–SEQUENCE, 57474876, 262

VENT
50811173, 241
FILTER, 56799125, 390

VENTURI, 57477887, 82

VLV, RELIEF FEED/TORQUE, 57216699, 318, 324

W

WASHER
50650415, 130
52144326, 374
52144425, 374
56986599, 224
57357006, 36
57357097, 38
58232695, 131
58232745, 131
58232760, 131
BAR, 50692243, 148
CINCH, 58233693, 160
GSKT, 35251545, 246
LOCK, 50718188, 374
LOCK–1–1/2, 95238119, 141
LOCK–TONGUED, 57291288, 88
THRU, 50334457, 140

WASHER–HARD, 57356669, 24

WASHER–PLATED, 57355075, 12, 28, 40

WASHER–THRUST, 57356867, 30

WEAR BUSHING, 50694934, 89

WEATHERSTRIP, 52233715, 54

WELDMENT, TOWER–25FT, STD, 57525420, 140

WHEEL
BLOWER, CCW, 57477879, 82
BLOWER–CW, 57477861, 82
C.W., 57096844, 56

WINDOW
57425480, 54
57425498, 54
SAFETY GLASS
57407769, 54
57407777, 54
57407819, 54
57407827, 54
57407843, 54
57407850, 54

WIPER
57224123, 110
57233660, 126
59322677, 220

WIRE, GROUND, 56949084, 153

WIRE LINK–9" *, 56999360, 153

WIRING, ENG. QSK19–600, 57479180, 148

WORM, 50830520, 131

WORMSHAFT, 50830538, 131

Y

YOKE, OSCILLATION, 57309783, 10

Atlas Copco Drilling Solutions, Inc. **A Company Within the Atlas Copco Group**

P.O.Box 462288, 2100 North First Street
Garland, Texas 75046-2288
www.atlascopco.com/drillingsolutions